ORDER NO. APD-8201-590

Service Manual

AUTO PRODUCTS

CQ-582EG

AUTOMATIC REPEATRACK CASSETTE CAR STEREO with MW/FM/FM MPX RADIO

AUTOMATISCHES WIEDERHOLSPUR-AUTOSTEREO-CASSETTENGERÄT mit MW/UKW/UKW-MPX-RUNDFUNKTEIL

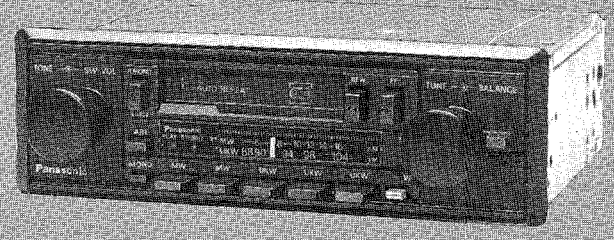

CONTENTS

	Page
SPECIFICATIONS	1
FEATURES	1
DIMENSIONS AND LOCATION OF CONTROLS	2
ANTENNA TRIMMER ALIGNMENT	2
FUSE REPLACEMENT	2
AUTOMATIC ANTENNA TRIMINAL	2
PARTS LOCATION	3
ALIGNMENT POINTS	4
ALIGNMENT INSTRUCTIONS	5, 8, 9
SCHEMATIC DIAGRAM	6
WIRING DIAGRAM	7
SERVICING FOR CASSETTE DECK	13
OPERATION OF REPEATRACK AND RADIO MONITORING CASSETTE DECK	14, 15
DIASSEMBLY INSTRUCTIONS	16
IC EQUIVALENT CIRCUIT	17
REPALCEMENT PARTS LIST	18, 21 ~ 29
EXPLODED VIEW (UNIT)	19
EXPLODED VIEW (TAPE DECK)	23
INTIAL FAILURE PARTS LIST	30

INHALTSVERZEICHNIS

	Seite
TECHNISCHE DATEN	1
MERKMALE	1
ABMESSUNGEN UND BEDIENUNGSELEMENTE	2
ABGLEICH DES ANTENNENTRIMMERS	2
SICHERUNGSWECHSEL	2
ANSCHLUSS DER AUTOMATISCHEN ANTENNE	2
ANORDUNG DER BAUELEMENTE	3
ABGLEICHPUNKTE	4
SCHALTBILD	6
VERDRAHTUNG	7
ABGLEICH-ANLEITUNG	10 ~ 12
WARTUNGSCHINWEISE FÜR DAS CASSETTENDECK	13
BEDIENUNG VON WIEDERHOLSPUR UND RADIO-MONITOR-CASSETTENDECK	14,15
ANWEISUNGEN FÜR DER ANSBAU	16
IC-ERSATZSCHALTBILD	17
ERSATZTEILLISTE	18,21 ~ 29
AUFGELÖSTE DARSTELLUNG(GANZES GERÄT)	19
AUFGELÖSTE DARSTELLUNG (TONBANDGRERÄT)	20
ANFANGS FEHLER ERSATZTEILUSTE	30

Panasonic

Matsushita Electric Trading Co., Ltd.
P. O. Box 288, Central Osaka, Japan

CQ-582EG

SPECIFICATIONS*

Power supply:	DC 12V (11 ~ 16V) Negative Ground
Current consumption:	Less than 0.8A (at 0.5W)
Max. power output:	8W x 2 (at 4Ω)
Undistorted power output:	2 x 5W (DIN 45 324)
Spaker impedance:	4 ~ 8Ω
Car Stereo	
Reproduction system:	4-Track, 2 Program Stereo
Tape Speed:	4.76 cm/sec.
Wow/Fluter:	Less than 0.2% (WRMS)
FM Stereo Radio	
Frequency range:	87.5 ~ 104MHz
Intermediate frequency:	10.7MHz
Maximum sensitivity:	Less than 4dB/μV, (S/N 10dB)
MW Radio	
Frequency range:	515 ~ 1,620kHz
Intermediate frequency:	450kHz
Maximum sensitivity:	Less than 26dB/μV (0.5W)
Dimensions:**	178 (W) x 145 (D) x 52 (H) mm
Weight:**	1.4 kg

TECHNISCHE DATEN*

Stromversorgung:	Gfeichstrom 12V (11 ~ 16V) Negative Erdung
Stroomverbruik:	Minder dan 0,8A (bij 0.5W)
Max. Ausgangsleistung:	8W x 2 (an 4Ω)
Nennausgangsleistung:	2 x 5W (DIN 45 324)
Lautsprecher-Impedanz:	4 ~ 8Ω
Cassetten-Abspielgerät	
Wiederabe-System:	4-Spur, 2-Programm Stereo
Band-Geschwindigkeit:	4,76 cm/sek.
Gleichlaufschwankungen:	Weiger als 0.2% (WRMS)
UKW/Stereo-Radio	
Frequenzbereich:	87,5 ~ 104MHz
Zwischenfrequenz:	10,7 MHz
Max. Empfindlichkeit:	Weniger als 4dB/μV, (S/N 10dB)
MW-Radio	
Frequenzbereich:	515 ~ 1.620kHz
Zwischenfrequenz:	450kHz
Max. Empfindichkeit:	Weiger als 26dB/μV (0.5W)
Abmessungen:**	178 (B) x 145 (T) x 52 (H) mm
Gewicht:**	1.4kg

FEATURES

- 4-track, 2-program automatic repeatrack car stereo tape player with MW/FM/FM-MPX, 5-pushbutton radio.
- DC 12 V, Negative ground.
- Sensitive superheterodyne system with IC's and ceramic filters.
- A.T.C (Automatic Tone Control)
- A.S.C. (Automatic Separation Control)
- A.R.T. (Automatic Repestrack)
- Radio monitoring.
- SK/DK decoder.
- E.I.A. (Electronic Interference Absorption)
- Loundness Control.
- Easy-to-adjust antenna trimmer.
- For in-dash installation.

*Specifications subject to change without notice.
**Weight and Dimensions shown are approximate.
***C-120 tape is not recommended to use.

MERKMALE

- Auto-Cassettentonbandgerät in Vierspur-Zweikanal-Stereo m Automatischer Wiederholspur + MW/UKW/UKW-MPX-Rad mit 5 Stationstasten.
- 12 V-Gleichstrombetrib, negative Erdung.
- Hochempfindlicher Superhet mit ICs und Keramikfiltern.
- A.T.C.
- A.S.C.
- A.R.T (Automatische Wiederholspur).
- Radio-Monitor.
- SK/DK Dekoder.
- E.U.A.-Schaltung.
- Loudness-Regelung.
- Mühelos abgleichbarer Antennentrimmer.
- Einbau direkt ins Armaturebrett.

*Anderungen vorbehalten.
**Gewicht und Abmessungen in annähernden Wertena-gegeben.
***C-120-Cassetten sind nicht zu empfehlen.

DIMENSIONS AND LOCATON OF CONTROLS/ABMESSUNGEN UND BEDIENUNGSELEMENTE

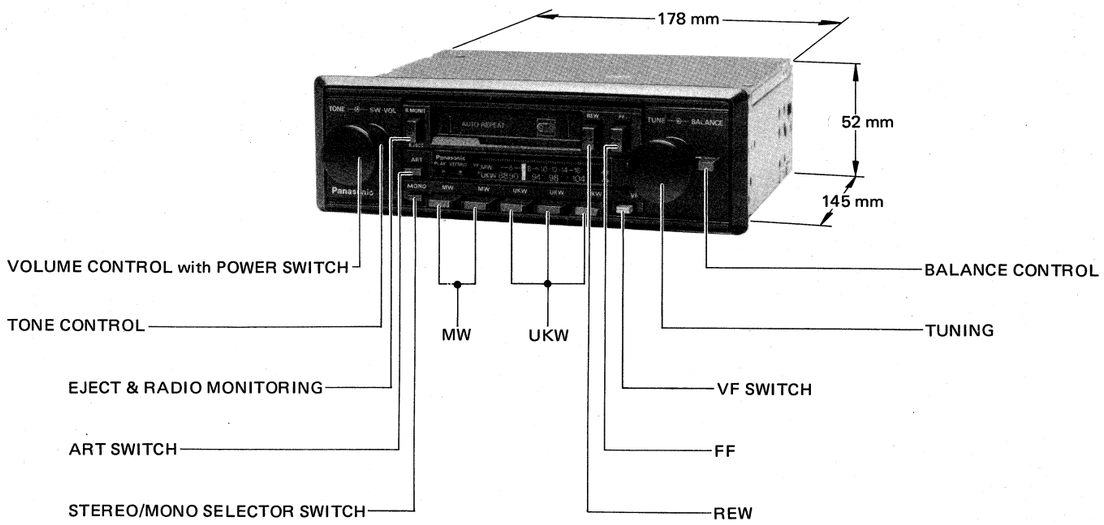

- Shaft Spacing: 131 mm

ANTENNA TRIMMER ALIGNMENT

The antenna trimmer alignment can be made without removing any parts.
To adjust the antenna trimmer C137, tune in a weak station near 1400 kHz.
Insert a small screwdriver though the escutcheon an shown below, and turn clockwise or counterclockwise for maximum output.

ABGLEICH DES ANTENNENTRIMMERS

Der Abgleich des Antennertrimmers kann vorgenommen werden, ohne irgendein Bauelement zu entfernen.
Um den Antennentrimmer C137 abzugleichen, stellen Sie das Gerät auf einen schwachen Sender um 1400 kHz.
Stecken Sie einen kleinen Schraubenzieher in ein Lock an der Vorderseite wie unten gezeigt, und drehen Sie die Einstellschraube im Uhrzeigersinn oder entgegen dem Uhrzeigersinn, bis die Ausgangsleistung ein Maximum erreicht.

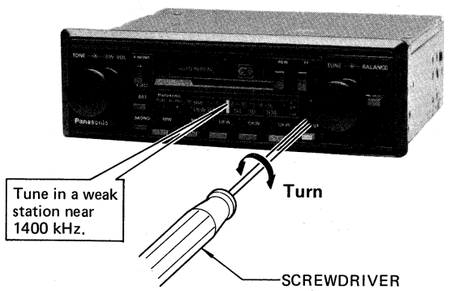

FUSE REPLACEMENT

Be sure to use a 3 A fuse for replacement. Use of a larger fuse may not protect the unit from excessive current drain.

SICHERUNGSWECHSEL

Die Ersatzsicherung muß vom 3-A-Typ sein. Eine Ersatzsicherung mit größerer Kapazität kann das Gerät bei Überbelastung nicht schützen.

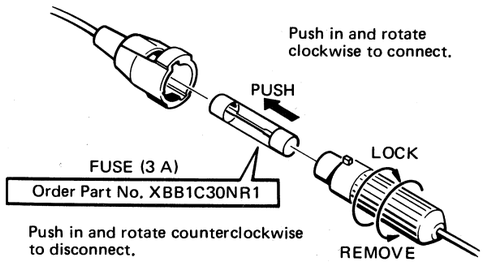

AUTOMATIC ANTENNA TERMINAL

Connect the pwoer supply cord for motor antenna from the relay of the motor antenna.
Don't use the motor antenna without relay for this unit (Maximum permissible current 500 mA).

ANSCHLUSS DER AUTOMATISCHEN ANTENNE

Schießen Sie das Stromkabel für automatische Antenne mit Elektromotorantrieb über ein Relais an die Batterie an.
Die motorgetriebene Antenne darf nicht angeschlossen werden, ohne ein dafür bestimmtes Relais (zulässige Maximalstromstäke: 500 mA) zu vewenden.

PARTS LOCATION/ ANORDUNG DER BAUELEMENTE

- Numbers in ( ), are listed in the Replacement Parts List, starting on page 18.
- For other parts location, see the EXPLODED VIEWS, page 19 & 20.

TOP VIEW, WITH COVER REMOVED

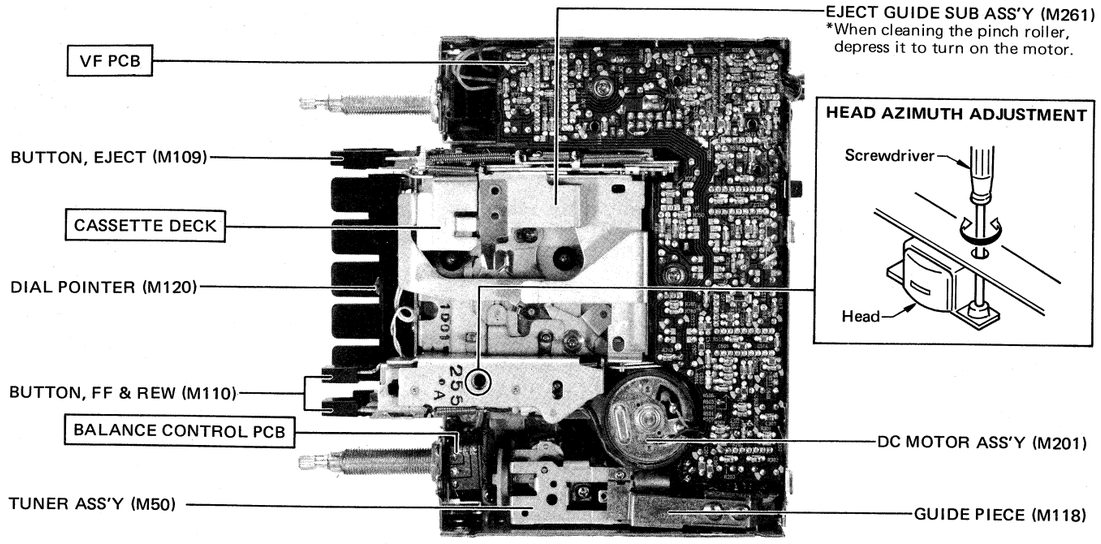

REAR VIEW AND CONNECTING DIAGRAM

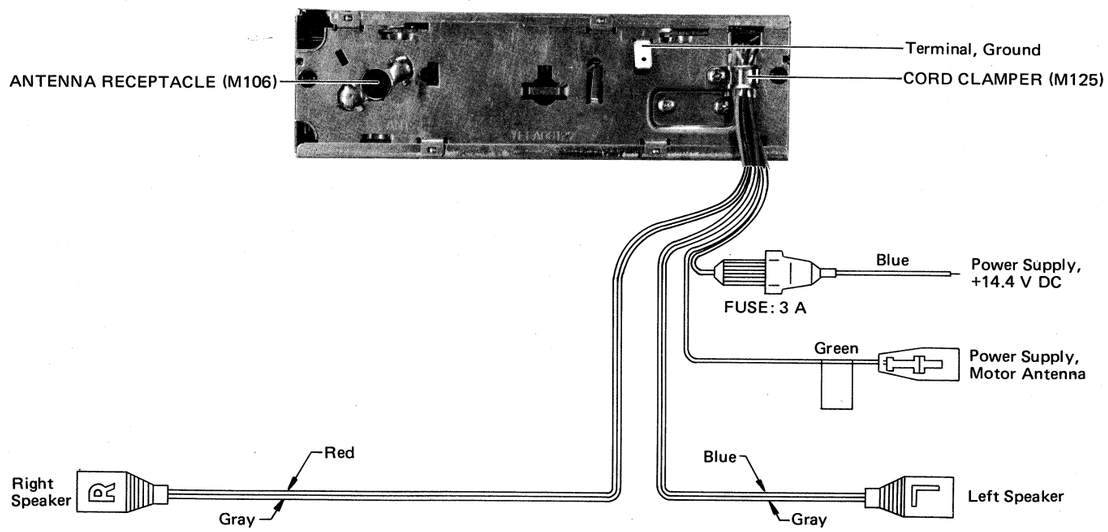

ALIGNMENT POINTS/ABGLEICHPUNKTE

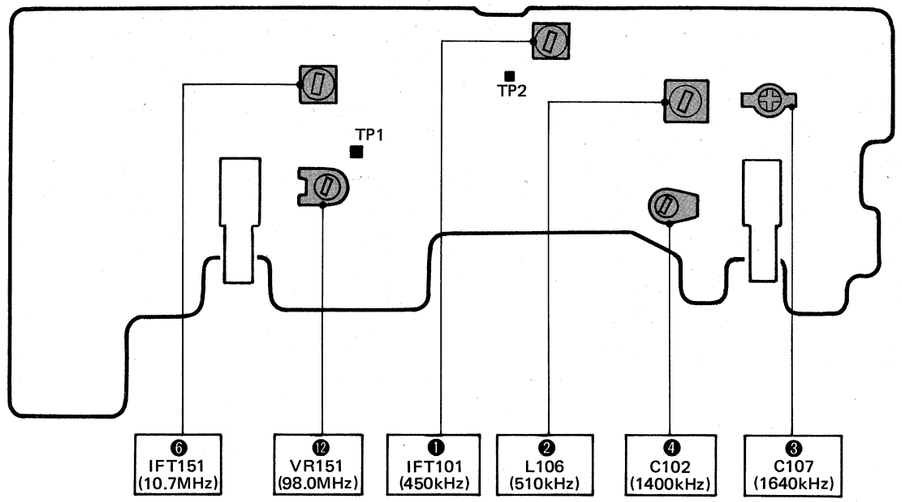

(Top View, with Cassette Deck Removed)

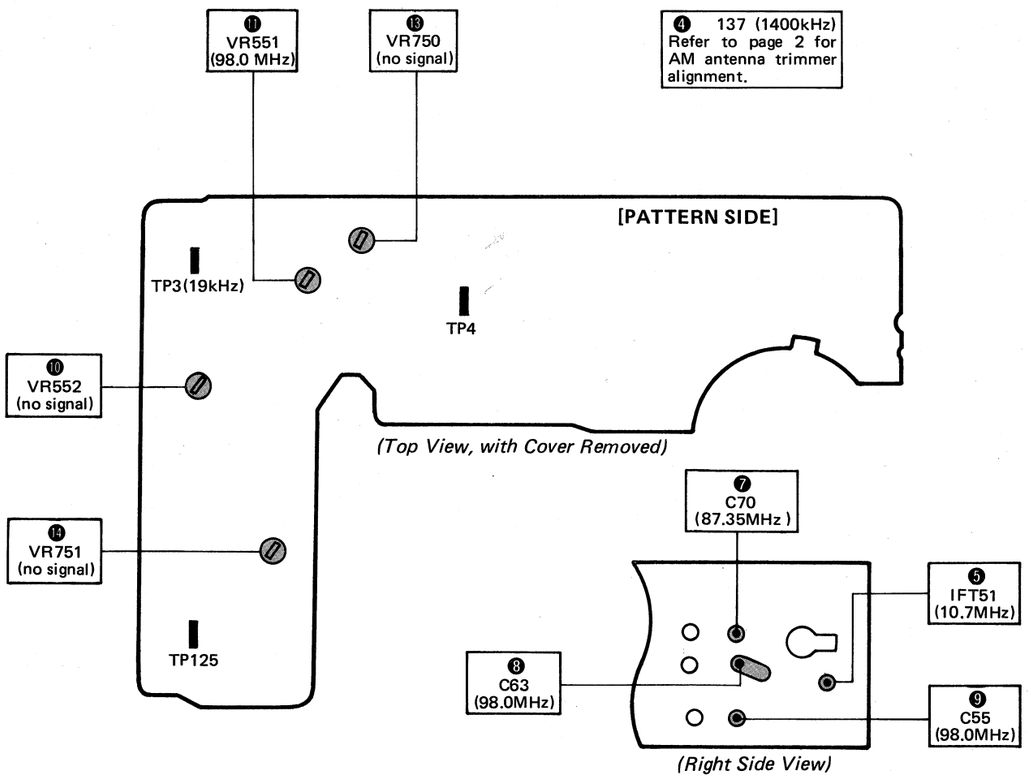

(Top View, with Cover Removed)

(Right Side View)

ALIGNMENT INSTRUCTIONS

ALIGNMENT CONDITIONS:

- Power supply voltage: DC 14.4 V
- Output impedance: 4 Ω
- Output power: 0.5 W
- Volume control: Set for 0.5 W output
- Balance control: Center
- Tone control: Center

1. AM I-F AND RF ALIGNMENT

Step	Alignment Item	Band Selector	Signal Generator	Input Terminal	VTVM Connection	Radio Dial Setting	Adjust	Remarks
1	AM I-F	AM	450 kHz [400 Hz Mod.]	Antenna receptacle	TP2—Ground or speaker terminals	Point of non-interference	IFT101	• Adjust for maximum output.
2	AM RF	AM	510 kHz [400 Hz Mod.]	Antenna receptacle	Speaker Terminals	Low freq-and stop	L106	• Adjust for maximum.
3		AM	1640 kHz [400 Hz Mod.]	Antenna receptacle	Speaker Terminals	High freq-end stop	C107	• Adjust for maximum.
4		AM	1400 kHz [400 Hz Mod.]	Antenna receptacle	Speaker Terminals	Tune to Signal	C102 C137	• Adjust for maximum. • Repeat steps 2 and 3.

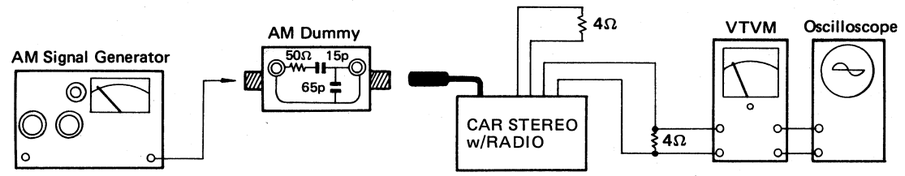

2. FM I-F ALIGNMENT

Step	Alignment Item	Band Selector	Sweep Generator	Input Terminal	VTVM Connection	Radio Dial Setting	Adjust	Remarks
5	FM I-F	FM	10.7 MHz	Antenna receptacle	TP5—Ground (17 of IC551)	Point of non-interference	IFT51	• Adjust for maximum amplitude and symmetrical curve.
6		FM	10.7 MHz	Antenna receptacle	TP1—Ground	Point of non-interference	IFT151	• Adjust for maximum amplitude and proper linearity between about ±100 kHz markers.

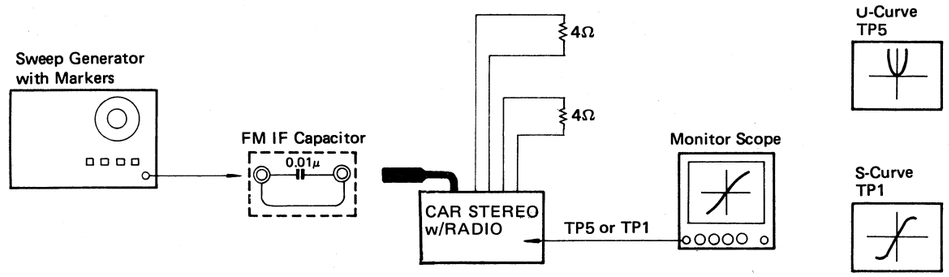

SCHEMATIC DIAGRAM/SCHALTBILD MODEL CQ-582EG

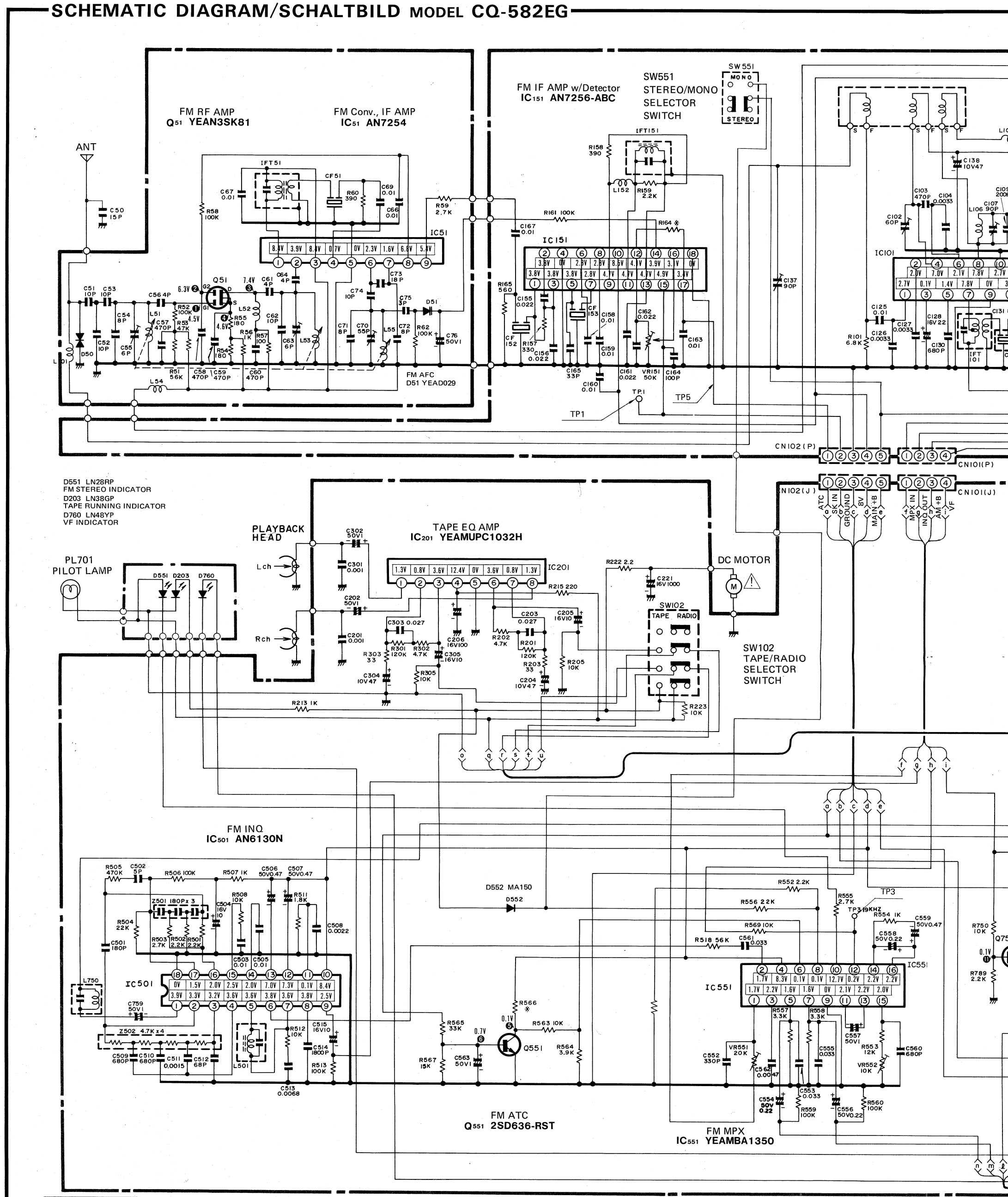

Jan., 1982

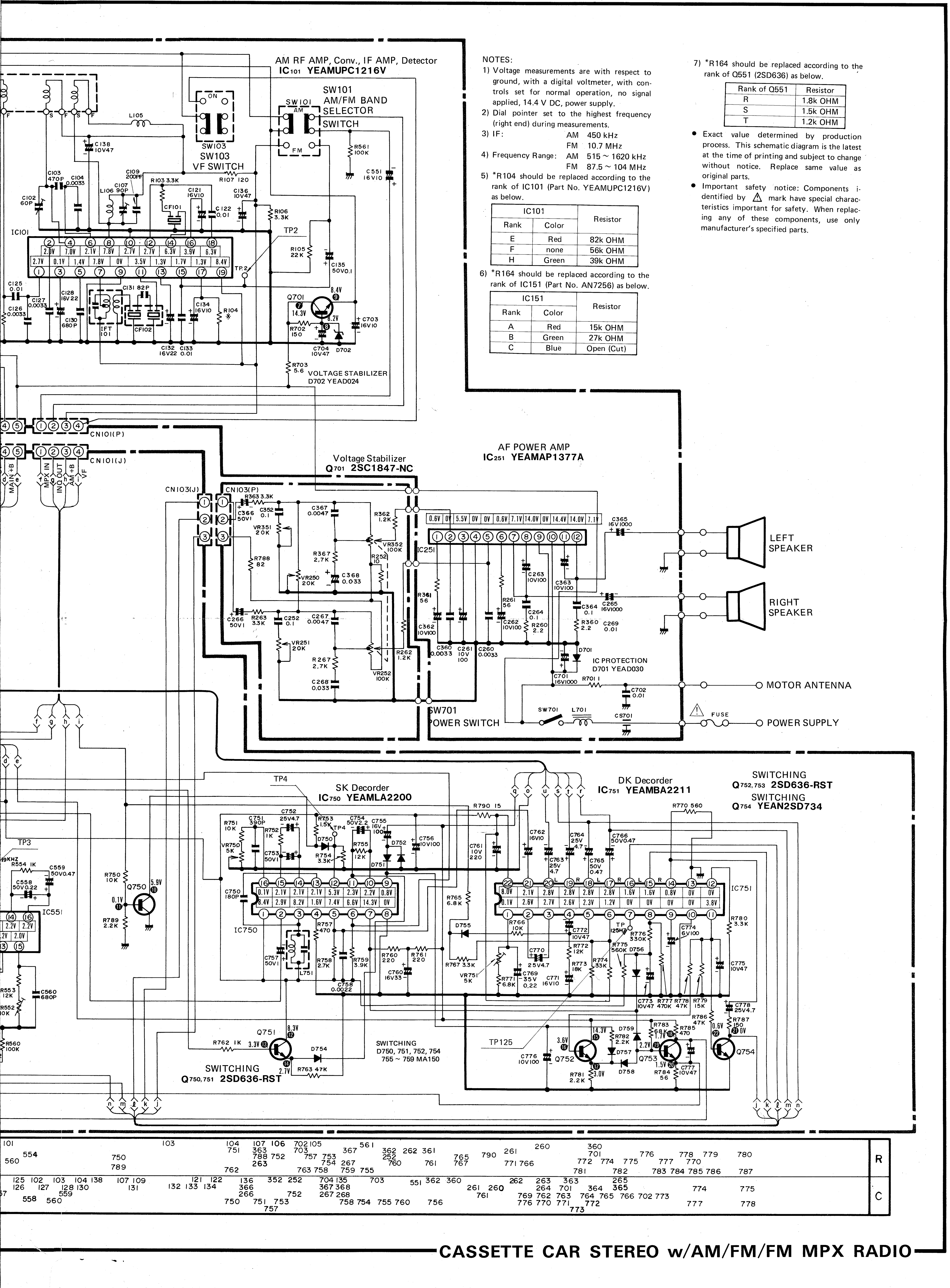

NOTES:

1) Voltage measurements are with respect to ground, with a digital voltmeter, with controls set for normal operation, no signal applied, 14.4 V DC, power supply.
2) Dial pointer set to the highest frequency (right end) during measurements.
3) IF: AM 450 kHz
   FM 10.7 MHz
4) Frequency Range: AM 515 ~ 1620 kHz
   FM 87.5 ~ 104 MHz
5) *R104 should be replaced according to the rank of IC101 (Part No. YEAMUPC1216V) as below.

IC101		Resistor
Rank	Color	
E	Red	82k OHM
F	none	56k OHM
H	Green	39k OHM

6) *R164 should be replaced according to the rank of IC151 (Part No. AN7256) as below.

IC151		Resistor
Rank	Color	
A	Red	15k OHM
B	Green	27k OHM
C	Blue	Open (Cut)

7) *R164 should be replaced according to the rank of Q551 (2SD636) as below.

Rank of Q551	Resistor
R	1.8k OHM
S	1.5k OHM
T	1.2k OHM

- Exact value determined by production process. This schematic diagram is the latest at the time of printing and subject to change without notice. Replace same value as original parts.
- Important safety notice: Components identified by ⚠ mark have special characteristics important for safety. When replacing any of these components, use only manufacturer's specified parts.

CASSETTE CAR STEREO w/AM/FM/FM MPX RADIO

NO.	VOLTAGE	NO.	VOLTAGE	PIN. NO.	VOLTAGE	PIN. NO.	VOLTAGE	PIN. NO.	VOLTAGE	PIN. NO.	VOLTAGE	PIN. NO.	VOLTAGE	PIN. NO.	VOLTAGE	PIN. NO.	VOLTAGE
⓫	4.5V	⓴	1.5V	⑤	1.4V	④	0V	④	12.4V	IC501		IC551		②	2.9V	④	2.6V
⓬	6.3V	㉑	0V	⑥	2.1V	⑤	3.8V	⑤	0V	①	3.9V	①	1.7V	③	8.2V	⑤	2.3V
⓭	7.4V	㉒	0.6V	⑦	7.8V	⑥	2.8V	⑥	3.6V	②	3.3V	②	1.7V	④	1.6V	⑥	1.2V
⓮	4.6V	PIN. NO.	VOLTAGE	⑧	7.8V	⑦	2.8V	⑦	0.8V	③	3.2V	③	2.2V	⑤	7.4V	⑦	0V
⓯	0.1V	IC51		⑨	0V	⑧	2.8V	⑧	1.3V	④	3.6V	④	8.3V	⑥	6.6V	⑧	0V
⓰	0.7V	①	8.4V	⑩	2.7V	⑨	4.7V	IC251		⑤	3.6V	⑤	1.6V	⑦	14.3V	⑨	0V
⓱	14.3V	②	3.9V	⑪	3.5V	⑩	8.5V	①	0.6V	⑥	3.8V	⑥	0.1V	⑧	0V	⑩	0V
⓲	8.2V	③	8.4V	⑫	2.7V	⑪	4.7V	②	0V	⑦	3.6V	⑦	1.6V	⑨	0.8V	⑪	3.8V
⓳	8.4V	④	0.7V	⑬	1.3V	⑫	4.1V	③	5.5V	⑧	3.8V	⑧	0.1V	⑩	2.2V	⑫	0V
⓴	5.9V	⑤	0V	⑭	6.3V	⑬	4.7V	④	0V	⑨	2.5V	⑨	0V	⑪	2.3V	⑬	0V
㉑	0.1V	⑥	2.3V	⑮	1.7V	⑭	3.9V	⑤	0V	⑩	8.4V	⑩	12.7V	⑫	5.3V	⑭	0.8V
㉒	8.3V	⑦	1.6V	⑯	3.9V	⑮	4.9V	⑥	0.6V	⑪	0.1V	⑪	2.1V	⑬	2.1V	⑮	1.6V
㉓	3.3V	⑧	6.8V	⑰	1.3V	⑯	3.1V	⑦	7.1V	⑫	7.3V	⑫	0.2V	⑭	2.1V	⑯	1.6V
㉔	2.7V	⑨	5.4V	⑱	6.3V	⑰	3.4V	⑧	14.0V	⑬	7.0V	⑬	2.2V	⑮	2.1V	⑰	2.8V
㉕	14.3V	IC101		⑲	8.4V	⑱	0V	⑨	0V	⑭	2.0V	⑭	2.2V	⑯	0.1V	⑱	2.8V
㉖	3.6V	①	2.7V	IC151		IC201		⑩	14.4V	⑮	2.5V	⑮	2.0V	IC751		⑲	2.8V
㉗	3.0V	②	2.0V	①	3.8V	①	1.3V	⑪	14.0V	⑯	2.0V	⑯	2.2V	①	0.1V	⑳	2.8V
㉘	1.7V	③	0.1V	②	3.8V	②	0.8V	⑫	0V	⑰	1.5V	IC750		②	2.6V	㉑	2.1V
㉙	2.2V	④	7.0V	③	3.8V	③	3.6V			⑱	0V	①	8.4V	③	2.7V	㉒	8.0V

■ Negative side is shown in blue.

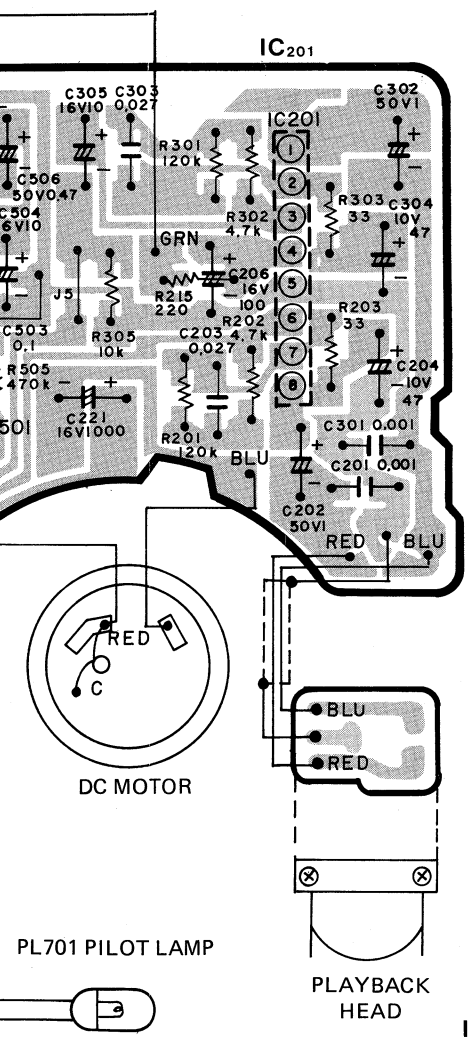

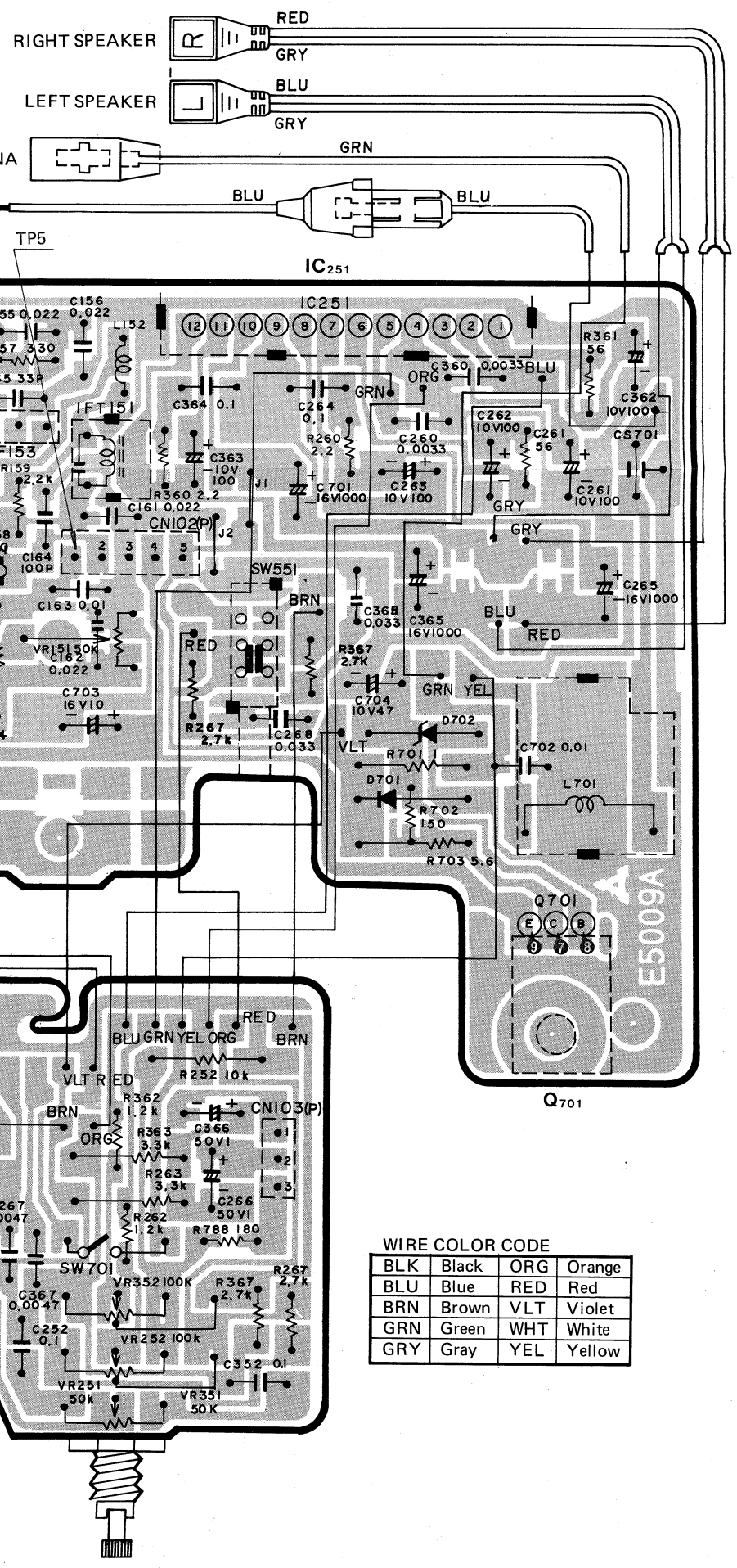

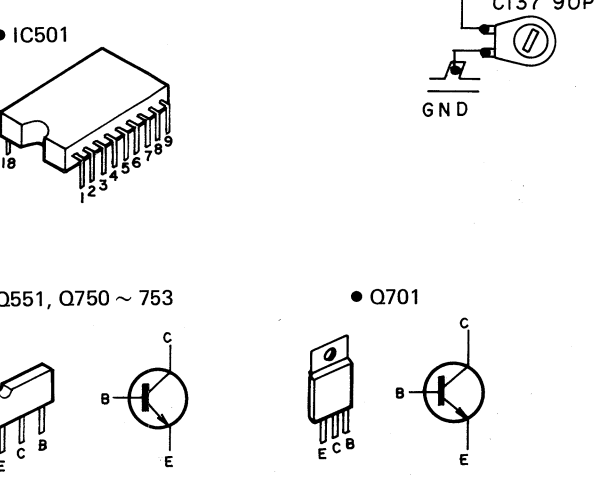

WIRE COLOR CODE

BLK	Black	ORG	Orange
BLU	Blue	RED	Red
BRN	Brown	VLT	Violet
GRN	Green	WHT	White
GRY	Gray	YEL	Yellow

WIRING DIAGRAM/VERDRAHTUNG MODEL CQ-582EG

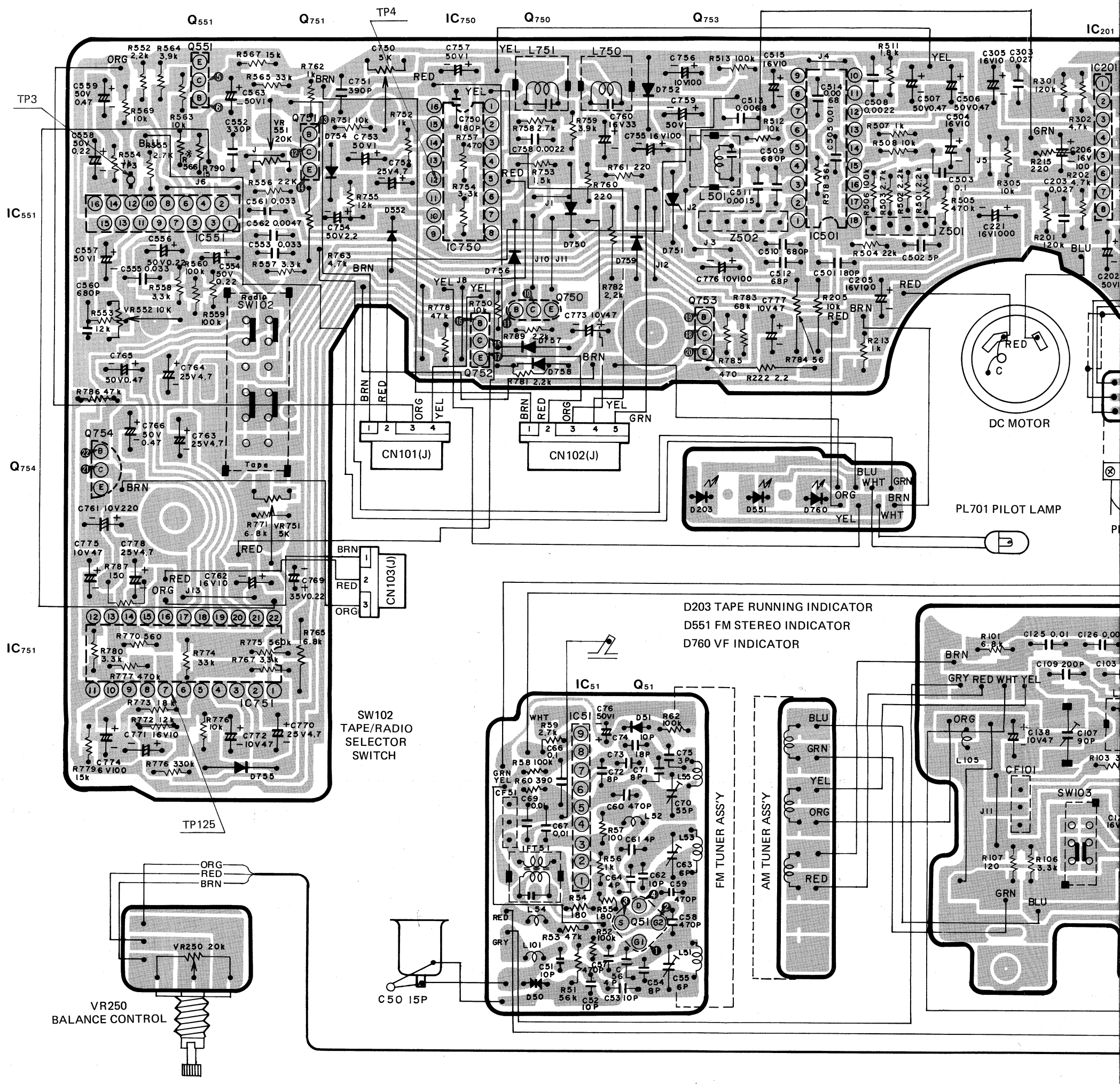

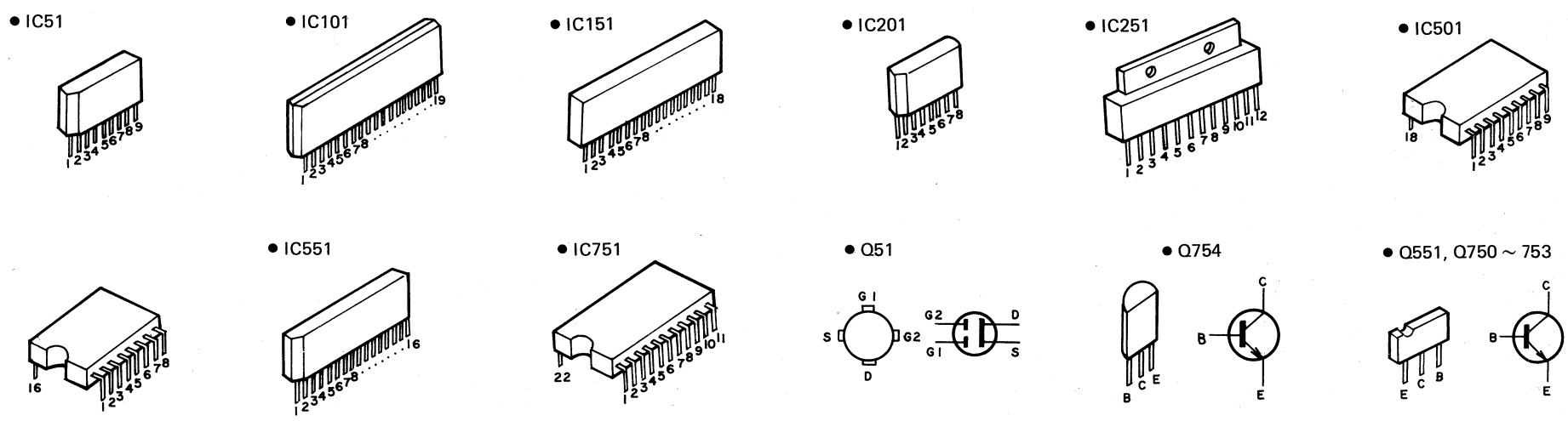

Jan., 1982

5. ABGLEICH VON UKW-RAUSCHEN

Stufe	Abgleich-objekt	Stellung des Wellenbereich-umschalters	Meßsender-frequenz	Ankopplung des Meßsenders	Anschluß des Anzeigeinstru-ments	Stellung der Abstimmskala	Abgleich	Anmerkung
12	FM NOISE	FM	98MHz, 74 dB [400 Hz Mod.]	Antennen-steckdose	Ausgang-sleistungs Messer an Lautsprecher-anschlusse	Auf Signal frequenz einstellen	VR151	• Den Laut-stärkeregler auf 0.5W einstellen. • Das Signal auf 0 dB dämpfen und auf −20 dB einstellen.

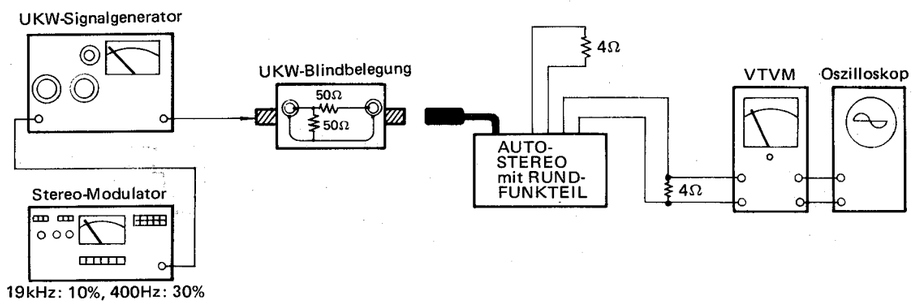

6. ABGLEICH VON SK/DK

Stufe	Abgleich-objekt	Stellung des Wellenbereich-umschalters	Meßsender-frequenz	Ankopplung des Meßsenders	Anschluß des Anzeigeinstru-ments	Stellung der Abstimmskala	Abgleich	Anmerkung
13	VF	SK	.....	.....	Frequenz-zähler: TP4—Erdung	.....	VR750	• Auf 57 kHz ±100 Hz einstellen.
14		DK	.....	.....	Frequenz-zähler: TP125—Erdung	.....	VR751	• Auf 125 Hz ±0.5 Hz einstellen.

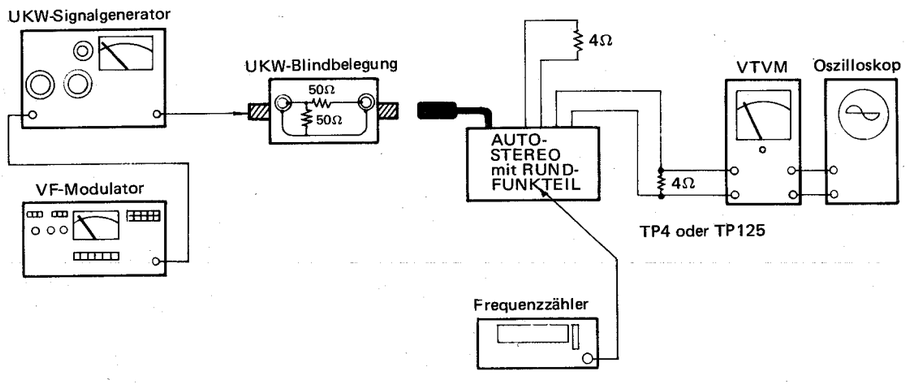

SERVICING HINT FOR CASSETTE DECK/WARTUNGSHINWEISE FÜR DAS CASSETTENDECK

REPLACEMENT OF CASSETTE GUIDE SUB ASS'Y
[includes Holder Plate Sub Ass'y, Eject Lever Sub Ass'y, Eject Guide Arm Sub Ass'y and relative parts]

1) Remove 2 screws.
2) Remove the cassette guide sub ass'y from the chassis.

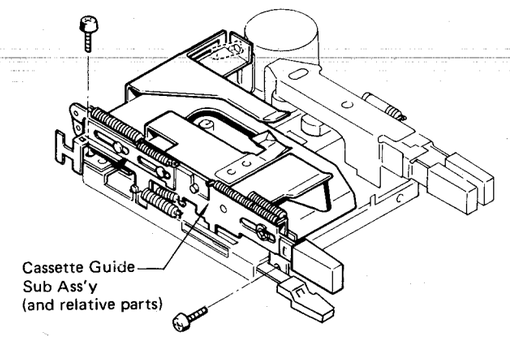

REPLACEMENT OF GEAR PLATE SUB ASS'Y
[includes Idler Gear (B) and relative parts]

1) Remove the cassette guide sub ass'y as described above.
2) Remove 2 screws.
3) Remove the gear plate sub ass'y from the chassis.

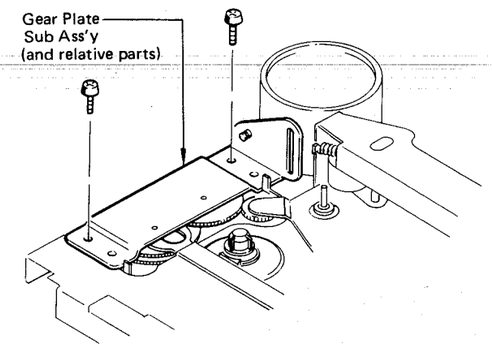

REPLACEMENT OF LEVER MOUTING SUB ASS'Y
[includes REW Lever, FF Lever, FF Lever Cam and relative parts]

1) Remove 1 screw.
2) Remove the lever mounting sub ass'y from the chassis.

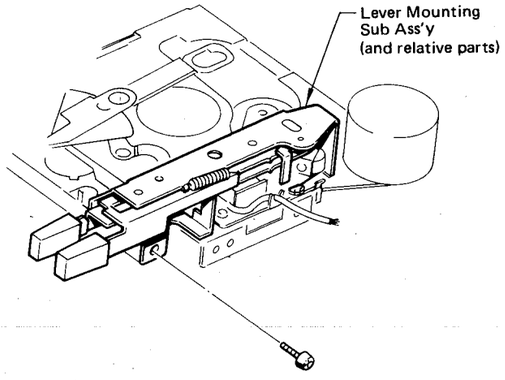

REPLACEMENT OF REEL PLATE SUB ASS'Y
[includes Head Base Action Plate Sub Ass'y, Take-Up Reel, Supply Reel and relative parts]

1) Remove 3 screws.
2) Unhook the drive belt from the motor pulley.
3) Remove the reel plate sub ass'y together the flywheel.

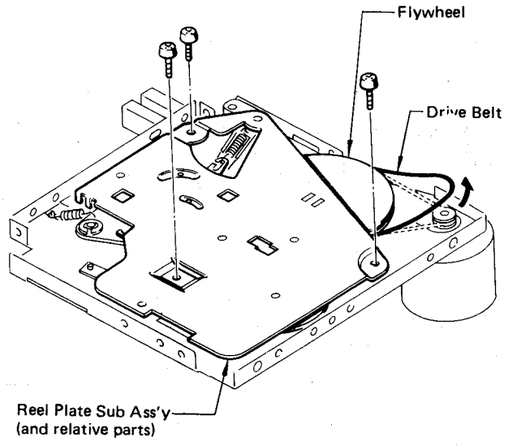

OPERATION OF REPEATRACK AND RADIO MONITORING CASSETTE DECK/BEDIENUNG VON WIEDERHOLSPUR UND RADIO-MONITOR-CASSETTENDECK

INSERTING

The cassette tape is inserted.

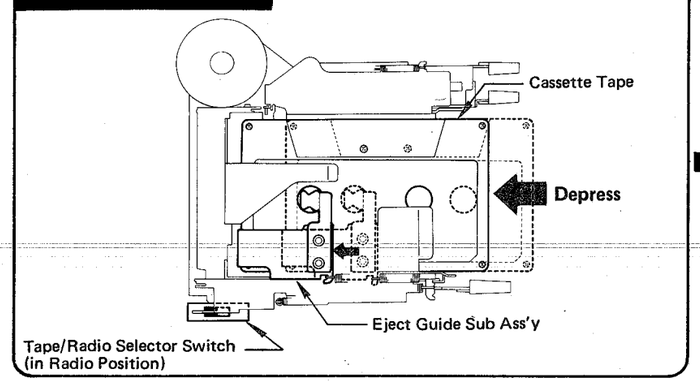

LOADING

The cassette tape is loaded and the DC motor starts to rotate.

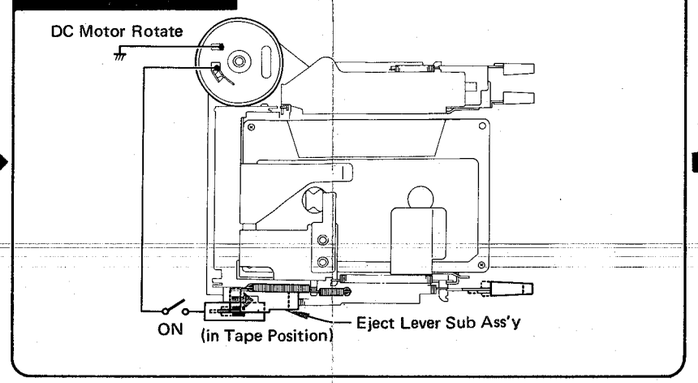

PLAYING

The head base sub ass'y is sloded and the tape reproduces.

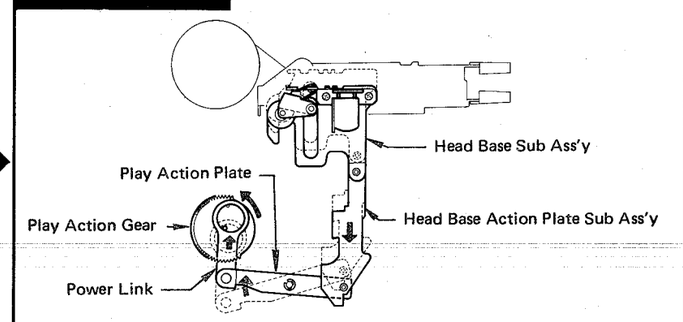

DRIVING

Cassette Deck Driving Mechanism

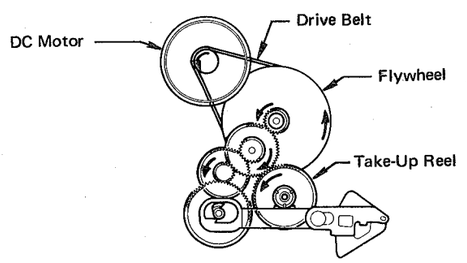

RADIO MONI

During tape playback, push the eject button lightly and the unit selects the radio.

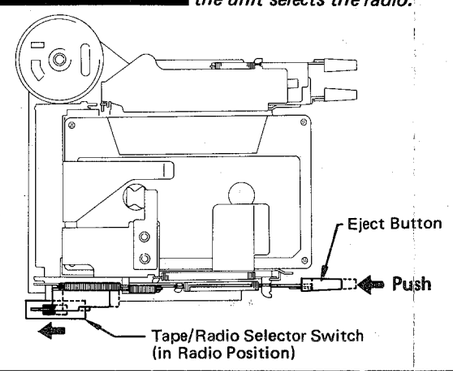

REWINDING

To repeat the same program, push and lock the REW button.

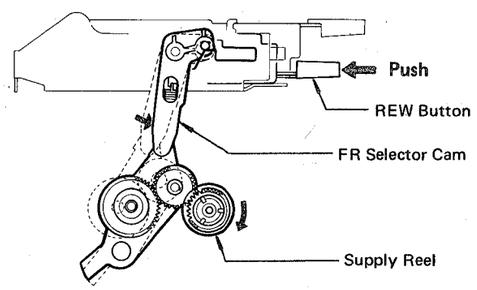

FAST FORW

To skip part of theprogram on the tape, push and lock the FF button.

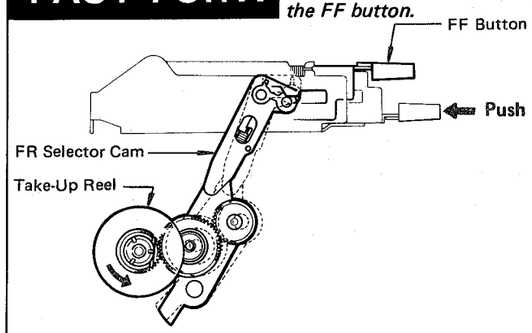

AT TAPE END

When the tape reaches its end, the unit will automatically switch to radio.

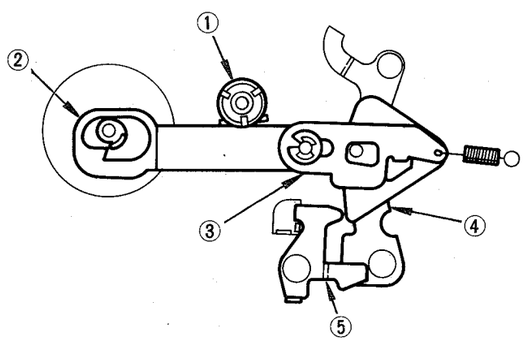

① The take-up reel stops to rotates.

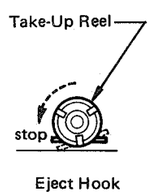

② The ejcect hook catches the nail of the detecting cam.

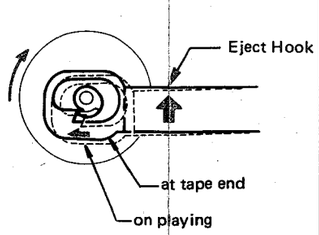

③ The eject hook action plate slides.

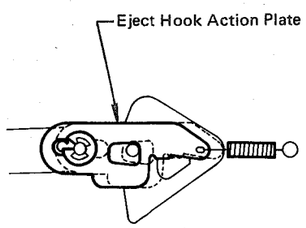

④ The cam turns to depress the lever.

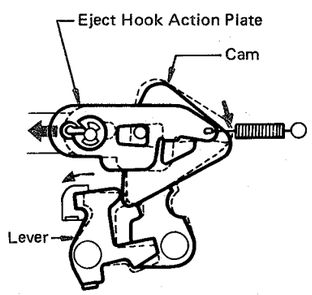

⑤ The head base action plate unhooks and it releases.

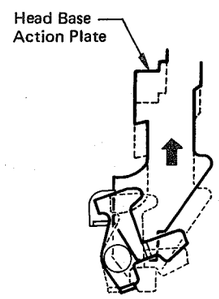

ART(Automatic Repeat)SYSTEM

When the ART pushbutton is switched on (▬) (depressed), the tape will be automatically rewound (when the tape reaches its end during play), then playback will automatically start (repeat) all over again. If left depressed, the ART operation will continue until the ART pushbutton is switched off (■).

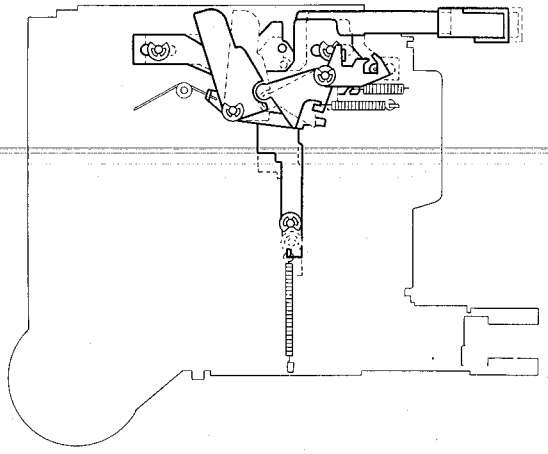

[Bottom View, at ART button depressed]

① At tape end, the head base action plate sub ass'y releases.

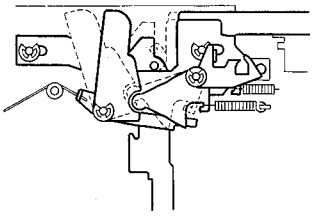

② Tne FR selector cam releases.

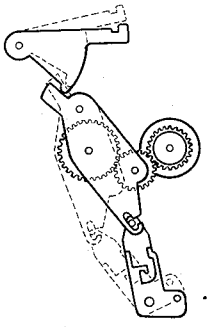

③ The REW reel rotates.

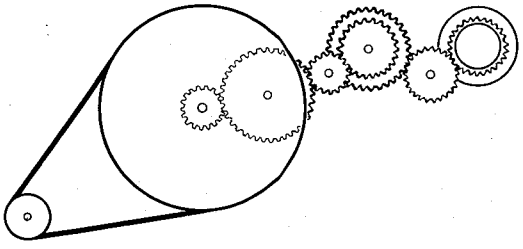

④ Rewinding.

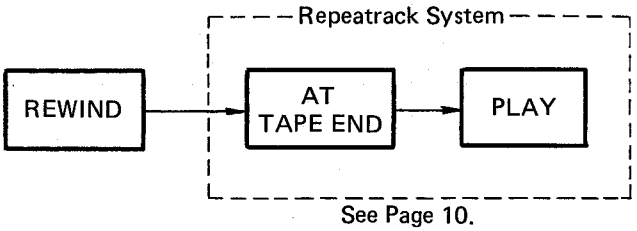

See Page 10.

However, automatic repeatrack operation will still function if you push the R. MONIT button on and off just after the end of the tape even when the ART pushbutton is switched off (■).

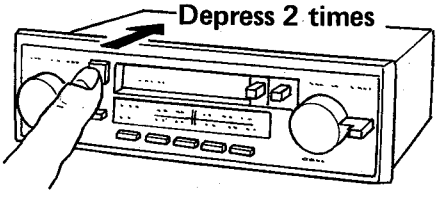

DISASSEMBLY INSTRUCTIONS/ANWEISUNGEN FÜR DER AUSBAU

①Remove Escutcheon Ass'y

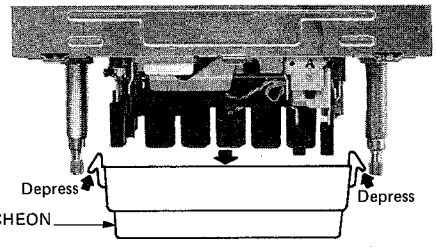

•Remove Back Plate

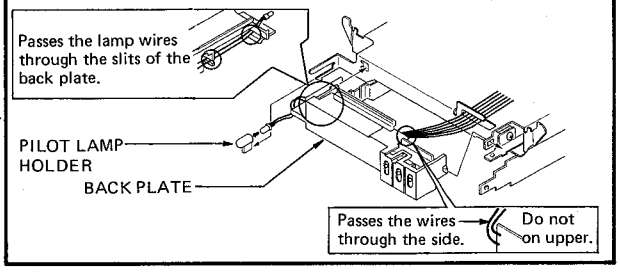

②Remove Bottom Cover & 1 Deck Mounting Screw

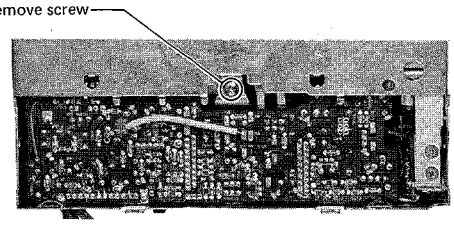

③Remove Upper Cover

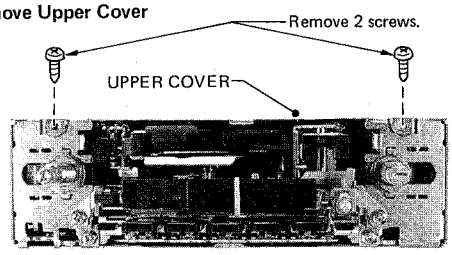

•Remove Tuner Ass'y

1) Remove 2 tuner ass'y mounting screws.

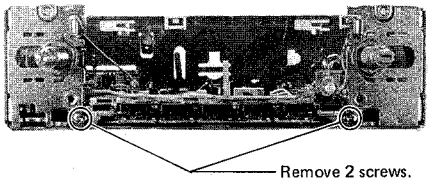

2) Remove 2 tuner ass'y mounting screws.

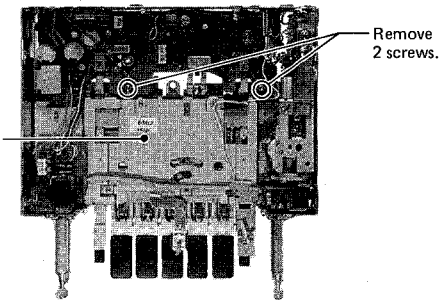

④Remove 2 Deck Mounting Screw

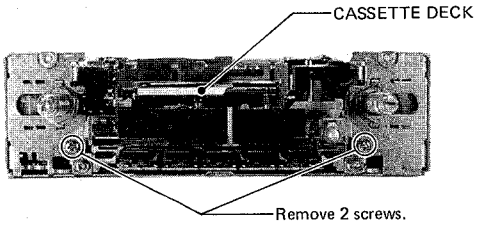

•Remove P.C.Board

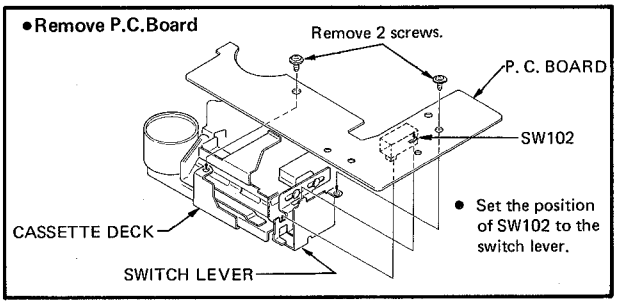

⑤Remove Deck

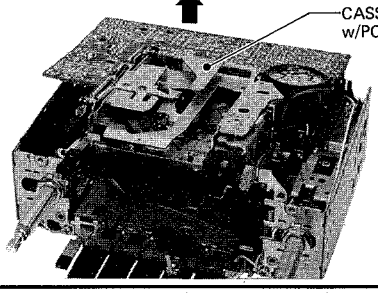

⑥Open Deck

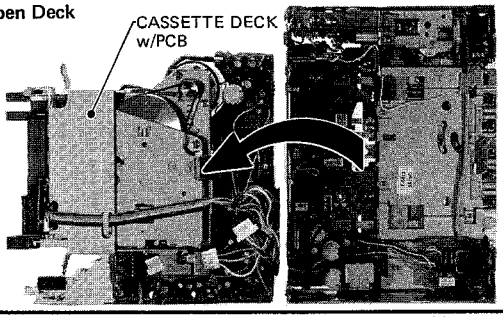

IC EQUIVALENT CIRCUIT/IC-ERSATZSCHALTBILD

AN7254 (IC51)

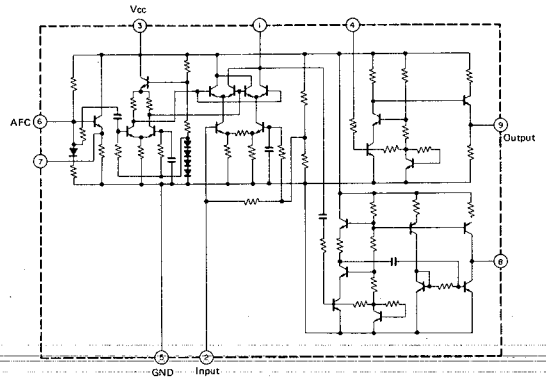

AN7256 (IC151)

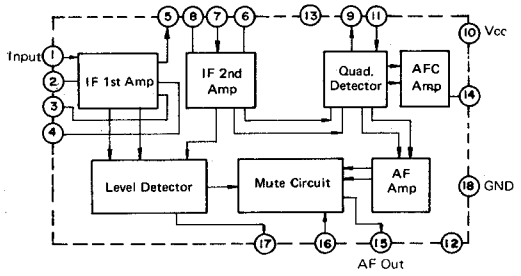

YEAMUPC1032H (IC201)

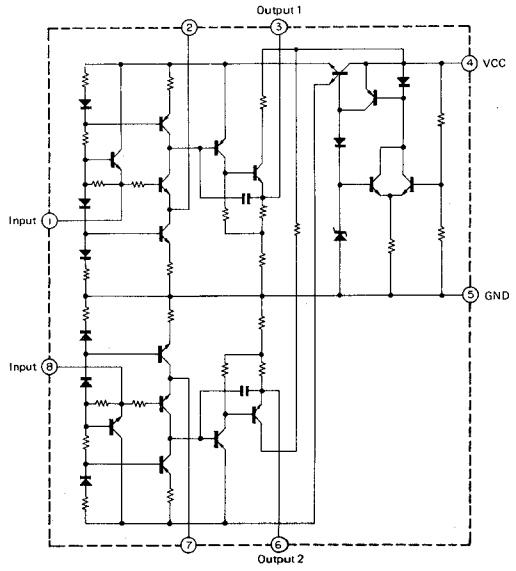

YEAMBA1350 (IC551)

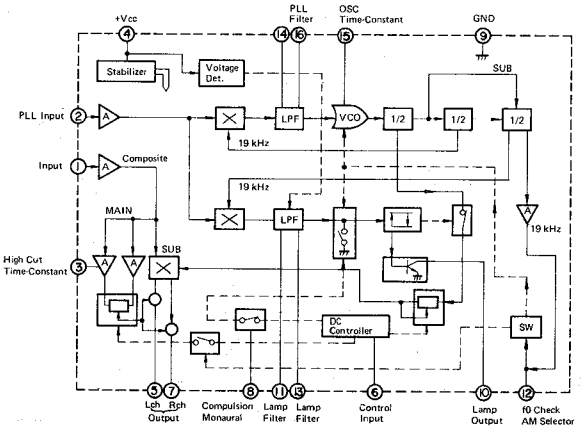

YEAMUPC1216V (IC101)

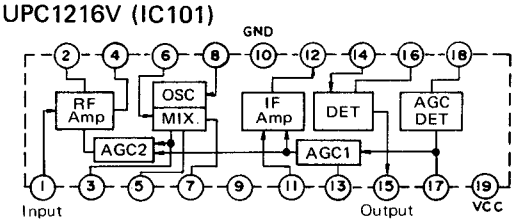

YEAMAP1377A (IC251)

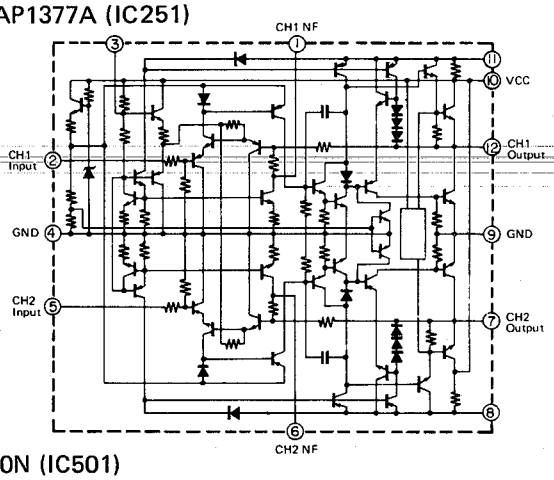

AN6130N (IC501)

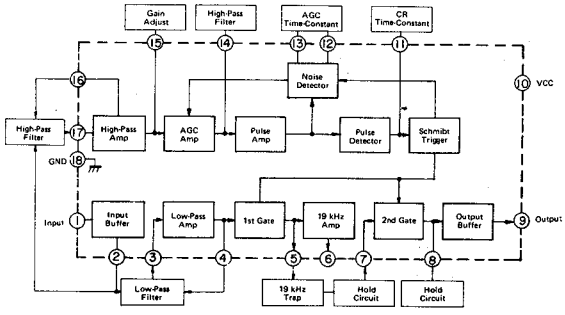

YEAMLA2200 (IC750)

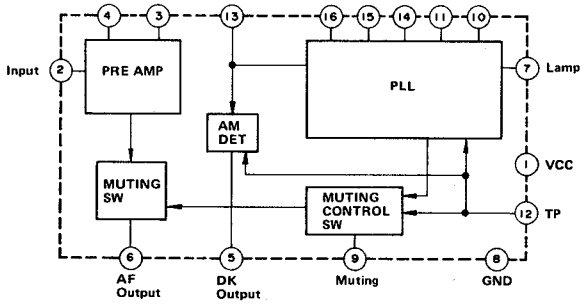

YEAMLA2211 (IC751)

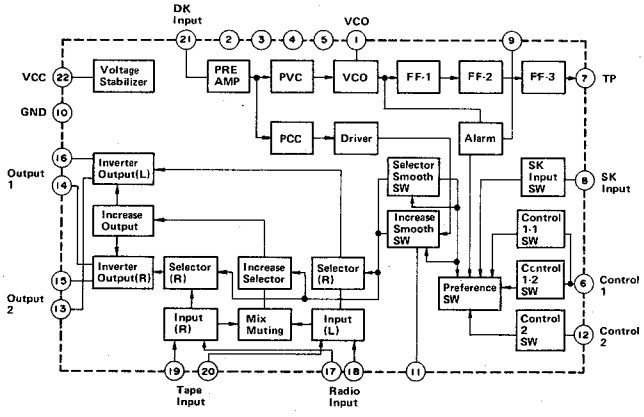

Replacement Parts List
Model NO. CQ-582EG

NOTES:
1. Be sure to make your orders of replacement parts according to this list.
2. Important safety notice: Components identified by ⚠ mark have special characteristics important for safety. When replacing any of these components, use only manufacture's specified parts.
3. Next to the Ref. No. in the parts list is a location key, to show the general location of the parts shown in the exploded drawing, as in a road map.

Ref. No.	Part No.	Part Name & Description	Pcs Set	Remarks
MISCELLANEOUS				
⚠F (4-C)	XBBIC30NR1	Fuse, 3 A	1	
PL (3-A)	YEAL30606WL	Pilot Lamp	1	
ZNR (2-C)	ERZD03DS331	Varister	1	
CN101P (3-C)	EMCS0452M	4P Plug	1	
CN101J (4-C)	EMCM0416A51	4P Jack	1	
CN102P (3-C)	EMCS0552M	5P Plug	1	
CN102J (3-B)	EMCM0516A51	5P Jack	1	
CN103P (2-A)	EMCS0352M	3P Plug	1	
CN103J (4-B)	EMCM0310A51	3P Jack	1	
M101 (1-C)	YEFA01433A	Chassis	1	
M102 (4-C)	YEFA03361C	Upper Cover	1	
M103 (1-B)	YEFA05191B	Bottom Cover	1	
M104 (2-C)	YEFA08127	Rear Plate	1	
M105 (1-A)	YEFC021221	Escutcheon Ass'y	1	
M106 (2-C)	YEAA10023	Antenna Receptacle	1	
M107 (3-A)	YEFX0211269	Mounting Bracket, Deck (Front)	1	
M108 (3-C)	YEFX0211270	Mounting Bracket, Deck (Rear)	1	
M109 (3-A)	YEFE13263	Button, Eject	1	
M110 (3-B)	YEFE13264	Button, FF, REW	2	
M111 (3-A)	YEFE13293	Button, ART	1	
M112 (2-A)	YEFJ10331	Back Plate	1	
M113 (2-A)	YEFK04341	Pilot Lamp Holder	1	
M114 (4-A)	YEFX0211271	Mounting Bracket, Deck (Left Side)	1	
M115 (2-A)	YEFX0211272	Mounting Bracket, ANT Trimmer	1	
M116 (2-B)	YEFX046520	Lever, Band Selector	1	

MODEL CQ-582EG

Ref. No.	Part No.	Part Name & Description	Pcs Set	Remarks
M117 (3-C)	YEFX0211178	Mounting Bracket, PCB	1	
M118 (3-C)	YEFX239208A	Guide Piece	1	
M119 (4-C)	YEAJ01152	Power Supply Cord	1	
M120 (3-B)	YEFH01233	Dial Pointer	1	
M121 (3-B) (2-B)	YEFX009093B	Joint, Switch	2	
M122 (1-C)	YEFX009081B	Joint, Tuner	1	
M123 (1-A) (1-B)	YEFX021869	Mounting Bracket, Pitch Fixing	2	
M124 (1-B)	YEJW02008AW	Washer, Flat	2	
M125 (2-C)	YEFX007146	Cord Clamper	1	
M126 (1-A) (1-B)	YEJN01042	Nut, Hexagon	2	
M127 (3-B)	YEFX021880	Mounting Bracket, IC	1	
M128 (3-B)	YEFF01277	Heat Sink	1	
M129 (3-B)	YEFA13331	Case	1	
M130 (3-C)	YEAJ04340	Speaker Cord, Right	1	
M131 (3-C)	YEAJ04341	Speaker Cord, Left	1	
M132 (4-C)	YEAJ01168	Power Supply Cord, Motor Antenna	1	
M133 (3-C)	YEAJ01089	Power Supply Cord	1	
M135 (3-A)	YEFX0211027A	Mounting Bracket, LED	1	
M138 (4-B) (4-C)	YEJT03007	Screw	2	
M139 (2-A)	YEFE14030	Knob, Stereo/Mono Selector	1	
M140	XSB26 + 4FXS	⊕ Screw, Bind 2.6mmø x 4mm	6	
M141	XTB3 + 6FFXS	⊕ Screw, Taptite 3mmø x 6mm	10	
M142	XTB3 + 5FFZS	⊕ Screw, Taptite 3mmø x 5mm	2	
M143	YEJT03017	Screw	1	
M144	XSS26 + 5FX	⊕ Screw, Flush 2.6mmø x 5mm	2	
M145 (3-B)	YEJS05002	Screw	1	
M146 (2-B)	YEFE14034	Knob, VF Switch	1	
M147	YEJT03015	Screw	2	

EXPLODED VIEW(UNIT)/AUFGELÖSTE DARSTELLUNGS(GANZES GERÄT)

■ Numbers in ○ are indicated REF. NO. in the REPLACEMENT PARTS LIST.

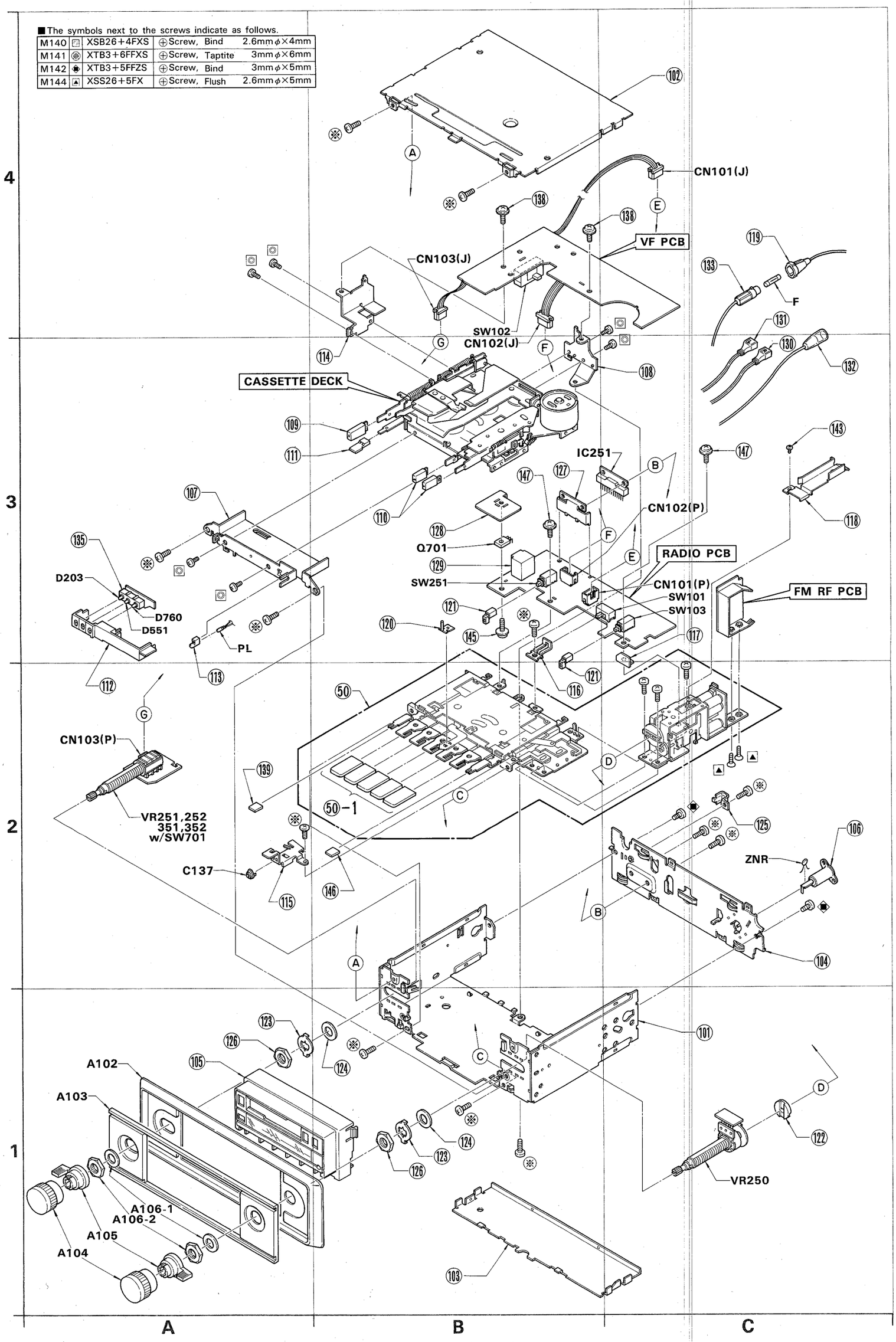

EXPLODED VIEW(TAPE DECK)/AUFGELÖSTE DARSTELLUNGS(TONBANDGERÄT)

■ Numbers in ○ are indicated REF. NO. in the REPLACEMENT PARTS LIST.

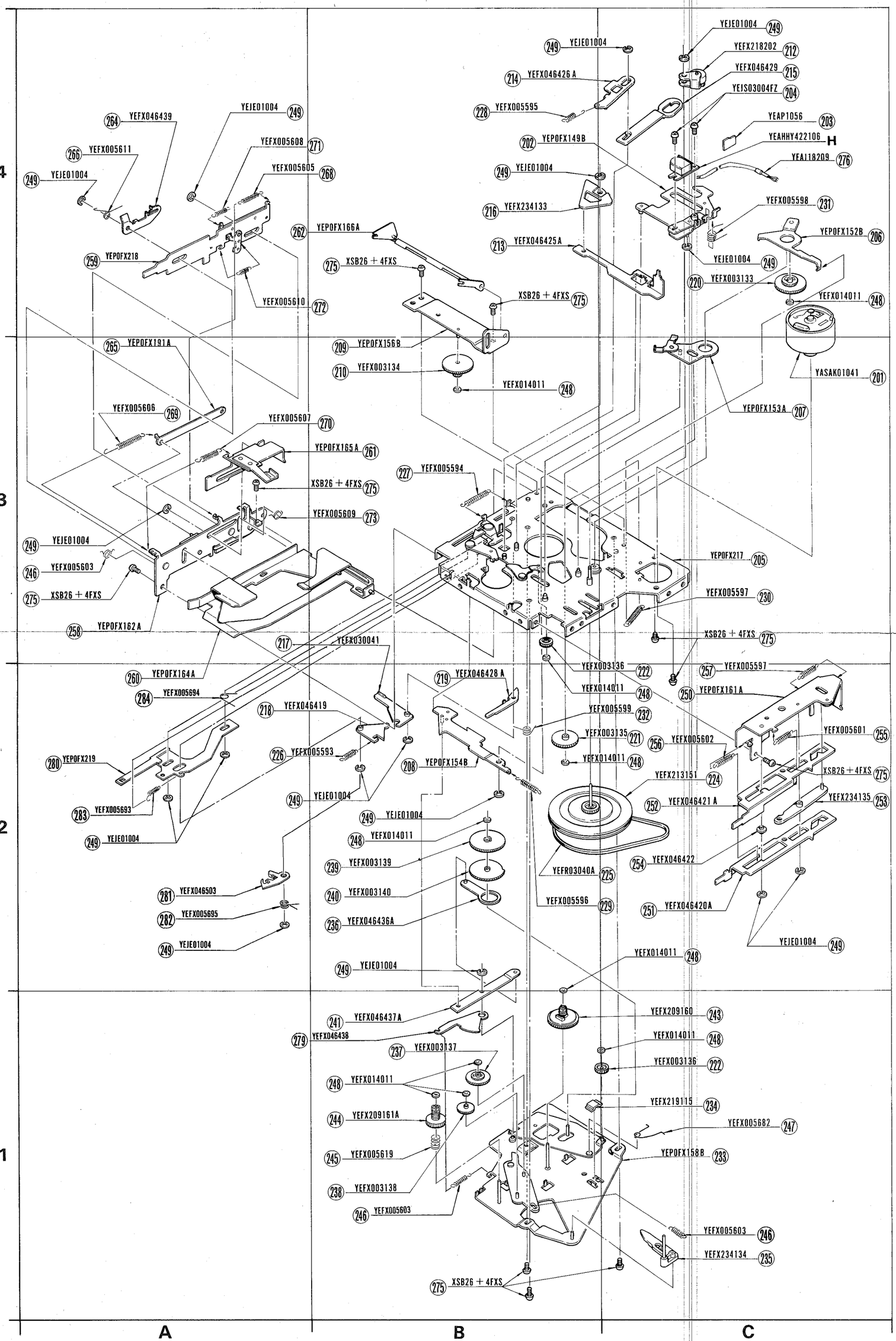

Ref. No.	Part No.	Part Name & Description	Pcs Set	Remarks
TAPE PLAYER PARTS				
HEAD				
H (4-C)	YEAHHY422106	Playback Head	1	
MECHANICAL PARTS				
⚠M201 (3-C)	YASAK01041	Motor Ass'y	1	
M202 (4-B)	YEP0FX245	Head Base Sub Ass'y	1	
M203 (4-C)	YEAP1056	Head PCB (no resistor & capacitor)	1	
M204 (4-C)	YEJS03004FZ	Head Screw	2	
M205 (3-C)	YEP0FX217A	Main Chassis Sub Ass'y	1	
M206 (4-C)	YEP0FX247	Idler Gear Plate Sub Ass'y	1	
M207 (3-C)	YEP0FX153A	Idler Gear (C) Plate Sub Ass'y	1	
M208 (2-B)	YEP0FX246	Head Base Action Plate Sub Ass'y	1	
M209 (3-B)	YEP0FX156B	Gear Plate Sub Ass'y	1	
M210 (3-B)	YEFX003134	Idler Gear (B)	1	
M212 (4-C)	YEFX218202A	Pinch Roller Ass'y	1	
M213 (4-B)	YEFX046425A	FR Selector Plate	1	
M214 (4-B)	YEFX046426A	Eject Hook Action Plate	1	
M215 (4-C)	YEFX046429A	Eject Hook	1	
M216 (4-B)	YEFX234133	Cam	1	
M217 (3-B)	YEFX030043	Auto-Stop Plate	1	
M218 (2-A)	YEFX046419A	Auto-Stop Lever	1	
M219 (2-B)	YEFX046428A	End Detection Preventing Plate	1	
M220 (4-C)	YEFX003133	Idler Gear (A)	1	
M221 (2-C)	YEFX003135	Idler Gear (C)	1	
M222 (3-C) (1-C)	YEFX003136A	Idler Gear (D)	2	
M223	YEJW02091A	Polyslider	1	
M224 (2-C)	YEFX213151	Flywheel	1	
M225 (2-C)	YEFE03040A	Drive Belt	1	
M226 (2-A)	YEFX005593	Auto-Stop Lever Spring	1	

Ref. No.	Part No.	Part Name & Description	Pcs Set	Remarks
M227 (3-B)	YEFX005594	Play Lock Spring	1	
M228 (4-B)	YEFX005595A	Eject Hook Spring	1	
M229 (2-C)	YEFX005596	Head Base Spring	1	
M230 (3-C)	YEFX005597	Idler Gear Spring	1	
M231 (4-C)	YEFX005598A	Pinch Roller Spring	1	
M232 (2-C)	YEFX005599	End Detection Preventing Spring	1	
M233 (1-C)	YEP0FX158B	Reel Plate Sub Ass'y	1	
M234 (1-C)	YEFX219115	Thrust Sheet	1	
M235 (1-C)	YEFX234134	FR Selector Cam	1	
M236 (2-B)	YEFX046436C	Power Link	1	
M237 (1-B)	YEFX003137	FR Gear	1	
M238 (1-B)	YEFX003138	REW Gear	1	
M239 (2-B)	YEFX003139	Detecting Gear	1	
M240 (2-B)	YEFX003170	Play Action Gear	1	
M241 (1-B)	YEFX046437A	Play Action Plate	1	
M243 (1-C)	YEFX209160A	Take-Up Reel	1	
M244 (1-B)	YEFX209161B	Supply Reel	1	
M245 (1-B)	YEFX005619A	Back Tension Spring	1	
M246 (3-A)	YEFX005603	Eject Hook Lever Spring, FR Lock Spring	2	
M247 (1-C)	YEFX005682	Spring	1	
M248	YEFX014019	Snap Ring	10	
M249	YEJE01004	E-Ring	16	
M250 (2-C)	YEP0FX248	Lever Mounting Sub Ass'y	1	
M251 (2-C)	YEFX046420A	REW Lever	1	
M252 (2-C)	YEFX046421A	FF Lever	1	
M253 (2-C)	YEFX234135	FR Lever Cam	1	
M254 (2-C)	YEFX046422	FR Lever Bushing	1	
M255 (2-C)	YEFX005601	FF Lever Spring	1	
M256 (2-C)	YEFX005602	REW Lever Spring	1	
M257 (2-C)	YEFX005597	FR Lock Spring	1	
M258 (3-A)	YEP0FX249	Hold Plate Sub Ass'y	1	
M259 (4-A)	YEP0FX218	Eject Lever Sub Ass'y	1	
M260 (2-A)	YEP0FX164A	Cassette Guide Sub Ass'y	1	
M261 (3-B)	YEP0FX165A	Eject Guide Sub Ass'y	1	

Ref. No.	Part No.	Part Name & Description	Pcs Set	Remarks
M262 (4-A)	YEP0FX166A	Guide Arm Sub Ass'y	1	
M263	YEP0FX167A	Guide Arm (B) Sub Ass'y	1	
M264 (4-A)	YEFX046439A	Switch Hook (A)	1	
M265 (3-A)	YEP0FX191A	Coupling Link Ass'y	1	
M266 (4-A)	YEFX005611A	Click Spring	1	
M268 (4-B)	YEFX005605	Eject Lever Spring	1	
M269 (3-A)	YEFX005606	Cassette Loading Spring	1	
M270 (3-B)	YEFX005607	Eject Spring	1	
M271 (4-B)	YEFX005608	Switch Selector Spring	1	
M272 (4-B)	YEFX005610	Switch Hook Spring	1	
M273 (3-B)	YEFX005609A	Cassette Guide Stopper Spring	1	
M274	YEFX005661A	Spring	1	
M275	XSB26 + 4FXS	⊕ Screw, Bind 2.6mmø x 4mm	10	
M276 (4-C)	YEAJ18209	Head Wire, Shielded	1	
M279 (1-A)	YEFX046438	Lever	1	
M280 (2-A)	YEP0FX219	Mode Selector Lever Sub Ass'y	1	
M281 (2-A)	YEFX046503	Click Plate (B)	1	
M282 (2-A)	YEFX005695	Click Spring	1	
M283 (2-A)	YEFX005693	Mode Lever Spring	1	
M284 (2-A)	YEFX005694	Mode Selector Spring	1	

Ref. No.	Part No.	Part Name & Description	Pcs Set	Remarks
ICs AND TRANSISTORS				
FM RF BLOCK				
IC51	AN7254	FM Conv., IF Amp	1	
Q51	YEAN3SK81	FM RF Amp	1	
RADIO BLOCK				
IC101	YEAMUPC1216V	AM RF Amp, Conv., IF Amp, Detector	1	
IC151	AN7256	FM IF Amp w/Detector	1	
IC251	YEAMAP1377A	AF Power Amp	1	
Q701	2SC1847	Voltage Stabiliter	1	
VF BLOCK				
IC201	YEAMUPC1032H	Tape EQ Amp	1	
IC501	AN6130N	FM INQ	1	
IC551	YEAMBA1350	FM MPX	1	
IC750	YEAMLA2200	SK Decoder	1	
IC751	YEAMLA2211	DK Decoder	1	
Q551	2SD636	FM ATC	1	
Q750 ~ 753	2SD636	Switching	4	
Q754	YEAN2SD734	Switching	1	

DIODES

FM RF BLOCK

Ref. No.	Part No.	Part Name & Description	Pcs Set	Remarks
D51	YEAD029	FM AFC	1	

RADIO BLOCK

Ref. No.	Part No.	Part Name & Description	Pcs Set	Remarks
D701	YEAD030	IC Protection	1	
D702	YEAD024	Voltage Stabilizer	1	

VF BLOCK

Ref. No.	Part No.	Part Name & Description	Pcs Set	Remarks
D203	LN38GP	Indicator, Tape Running	1	
D551	LN28RP	Indicator, FM Stereo	1	
D750, 751 752, 754	MA150	Switching	10	
755, 756 757, 758				
759, 552				
D760	LN48YP	Indicator, VF	1	

CAPACITORS

FM RF BLOCK

Ref. No.	Part No.	Part Name & Description	Pcs Set	Remarks
C50	YECCD1H150KM	15 PF 50WV ±10% Ceramic	1	
C51	YECCD1H100FM	10 PF 50WV ±1 PF Ceramic	1	
C52	YECCD1H100FM	10 PF 50WV ±1 PF Ceramic	1	
C53	YECCD1H100JS	10 PF 50WV ±5% Ceramic	1	
C54	YECCD1H080DS	8 PF 50WV ±0.5 PF Ceramic	1	
C56	YECCD1H040DM	4 PF 50WV ±0.5 PF Ceramic	1	
C57	YECKD05471K	470 MFD 50WV ±10% Ceramic	1	
C58	YECKD05471K	470 MFD 50WV ±10% Ceramic	1	
C59	YECKD05471K	470 MFD 50WV ±10% Ceramic	1	
C60	YECKD05471K	470 MFD 50WV ±10% Ceramic	1	
C61	YECCD1H040DM	4 PF 50WV ±0.5 PF Ceramic	1	
C62	YECCD1H100JS	10 PF 50WV ±5% Ceramic	1	
C64	YECCD1H040DM	4 PF 50WV ±0.5 PF Ceramic	1	
C66	YECKD05103Z	0.01 MFD 50WV +80, −20% Ceramic	1	
C67	YECKD05103Z	0.01 MFD 50WV +80, −20% Ceramic	1	
C69	YECKD05103Z	0.01 MFD 50WV +80, −20% Ceramic	1	
C71	YECCD1H080DC	8 PF 50WV ±0.5 PF Ceramic	1	
C72	YECCD1H080DM	8 PF 50WV ±0.5 PF Ceramic	1	
C73	YECCD1H180KM	18 PF 50WV ±10% Ceramic	1	
C74	YECCD1H100DU	10 PF 50WV ±0.5 PF Ceramic	1	
C75	YECCD1H030DS	3 PF 50WV ±0.5 PF Ceramic	1	
C76	ECEA1HK010	1 MFD 50WV Electrolytic	1	

Ref. No.	Part No.	Part Name & Description	Pcs Set	Remarks
		RADIO BLOCK		
C103	YECUV1H471JM	470 PF 50WV ±5% Chip	1	
C104	YECUV1H332KX	0.0033 MFD 50WV ±10% Chip	1	
C109	YECUV1H201JS	200 PF 50WV ±5% Chip	1	
C121	ECEA1CK100	10 MFD 16WV Electrolytic	1	
C122	YECCD1E103KB	0.01 MFD 25WV ±10% Ceramic	1	
C125	YECUV1H103KX	0.01 MFD 50WV ±10% Chip	1	
C126	YECUV1H332KX	0.0033 MFD 50WV ±10% Chip	1	
C127	YECUV1H333KX	0.033 MFD 50WV ±10% Chip	1	
C128	ECEA1CS220	22 MFD 16WV Electrolytic	1	
C130	YECUV1H681JM	680 PF 50WV ±5% Chip	1	
C131	YECUV1H820JM	82 PF 50WV ±5% Chip	1	
C132	ECEA1CS220	22 MFD 16WV Electrolytic	1	
C133	YECUV1H103KX	0.01 MFD 50WV ±10% Chip	1	
C134	ECEA1CK100	10 MFD 16WV Electrolytic	1	
C135	ECEA1HK0R1	0.1 MFD 50WV Electrolytic	1	
C136	ECEA1AK470	47 MFD 10WV Electrolytic	1	
C138	ECEA1AK470	47 MFD 10WV Electrolytic	1	
C155	YECUV1H223KX	0.022 MFD 50WV ±10% Chip	1	
C156	YECUV1H223KX	0.022 MFD 50WV ±10% Chip	1	
C158	YECUV1H103ZF	0.01 MFD 50WV +80, −20% Chip	1	
C159	YECUV1H103ZF	0.01 MFD 50WV +80, −20% Chip	1	
C160	YECUV1H103KX	0.01 MFD 50WV ±10% Chip	1	
C161	YECUV1H223KX	0.022 MFD 50WV ±10% Chip	1	
C162	YECUV1H223KX	0.022 MFD 50WV ±10% Chip	1	
C163	YECUV1H103ZF	0.01 MFD 50WV +80, −20% Chip	1	
C164	YECUV1H101JM	100 MFD 50WV ±5% Chip	1	
C165	YECUV1H330JM	33 PF 50WV ±5% Chip	1	
C167	YECUV1H103ZF	0.01 MFD 50WV +80, −20% Chip	1	
C252	ECQV05104JZ	0.1 MFD 50WV ±5% Polyester	1	
C260	YECUV1H332KX	0.0033 MFD 50WV ±10% Chip	1	
C261	ECEA1AS101	100 MFD 10WV Electrolytic	1	
C262	ECEA1AS101	100 MFD 10WV Electrolytic	1	

Ref. No.	Part No.	Part Name & Description	Pcs Set	Remarks
C263	ECEA1AS101	100 MFD 10WV Electrolytic	1	
C264	ECQV05104JZ	0.1 MFD 50WV ±5% Polyester	1	
C265	ECEA1CV102WX	1000 MFD 16WV Electrolytic	1	
C266	ECEA1HK010	1 MFD 50WV Electrolytic	1	
C267	YECUV1H472KB	0.0047 MFD 50WV ±10% Chip	1	
C268	YECUV1E333KX	0.22 MFD 50WV +10% Chip rolytic	1	
C352	ECQV05104JZ	0.1 MFD 50WV ±5% Polyester	1	
C360	YECUV1H332KX	0.0033 MFD 50WV ±10% Chip	1	
C362	ECEA1AS101	100 MFD 10WV Electrolytic	1	
C363	ECEA1AS101	100 MFD 10WV Electrolytic	1	
C364	ECQV05104JZ	0.1 MFD 50WV ±5% Polyester	1	
C365	ECEA1CV102WX	1000 MFD 16WV Electrolytic	1	
C366	ECEA1HK010	1 MFD 50WV Electrolytic	1	
C367	YECCD1E472KB	0.0047 MFD 50WV ±10% Ceramic	1	
C368	YECUV1E333KX	0.033 MFD 50WV ±10% Chip lytic	1	
C551	ECEA1CK100	10 MFD 16WV Electrolytic	1	
C701	ECEA1CV102WX	1000 MFD 16WV Electrolytic	1	
C702	YECUV1H103ZF	0.01 MFD 50WV +80, −20% Chip	1	
C703	ECEA1CK100	10 MFD 16WV Electrolytic	1	
C704	ECEA1AK470	47 MFD 10WV Electrolytic	1	
CS701	YECCL55B222M	Feedthrough	1	

Ref. No.	Part No.	Part Name & Description	Pcs Set	Remarks
		VF BLOCK		
C201	YECUV1H102KX	0.001 MFD 50WV ±10% Chip	1	
C202	ECEA1HK010	1 MFD 50WV Electrolityc	1	
C203	YECUV1H273KX	0.027 MFD 50WV ±10% Chip	1	
C204	ECEA1AK470	47 MFD 10WV Electrolytic	1	
C205	ECEA1CK100	10 MFD 16WV Electrolytic	1	
C206	ECEA1CS101	100 MFD 16WV Electrolytic	1	
C221	ECEA1CV102WX	1000 MFD 16WV Electrolytic	1	
C301	YECUV1H102KX	0.001 MFD 50WV ±10% Chip	1	
C302	ECEA1HK010	1 MFD 50WV Electrolytic	1	
C303	YECUV1H273KX	0.027 MFD 50WV ±10% Chip	1	
C304	ECEA1AK470	100 MFD 10WV Electrolytic	1	
C305	ECEA1CS100	10 MFD 16WV Electrolytic	1	
C501	YECUV1H181JM	180 MFD 50WV ±5% Chip	1	
C502	YECUV1H050CM	5 PF 50WV ±0.25 PF Chip	1	
C503	YECUV1H103ZF	0.01 MFD 50WV +80, −20% Chip	1	
C504	ECEA1CS100	10 MFD 16WV Electrolytic	1	
C505	YECUV1H103ZF	0.01 MFD 50WV +80, −20% Chip	1	
C506	ECEA1HSR47	0.47 MFD 50WV Electrolytic	1	
C507	ECEA1HSR47	0.47 MFD 50WV Electrolytic	1	
C508	YECUV1H222KX	0.0022 MFD 50WV ±10% Chip	1	
C509	YECUV1H681JM	680 MFD 50WV ±5% Chip	1	
C510	YECUV1H681JM	680 MFD 50WV ±5% Chip	1	
C511	YECUV1H152KX	0.0015 MFD 50WV ±10% Chip	1	
C512	YECUV1H680JM	68 PF 50WV ±5% Chip	1	
C513	YECUV1H682KX	0.0068 MFD 50WV ±10% Chip	1	
C514	YECUV1H182KX	0.0018 MFD 50WV ±10% Chip	1	
C515	ECEA1CS100	10 MFD 16WV Electrolytic	1	
C552	YECUV1H331JM	330 MFD 50WV ±5% Chip	1	
C553	YECUV1H333KX	0.033 MFD 50WV ±10% Chip	1	
C554	ECEA1HR22	0.22 MFD 50WV Electrolytic	1	
C555	YECUV1H333KX	0.033 MFD 50WV ±10% Chip	1	
C556	ECEA1HR22	0.22 MFD 50WV Electrolytic	1	

Ref. No.	Part No.	Part Name & Description	Pcs Set	Remarks
C557	ECEA1HS010	1 MFD 50WV Electrolytic	1	
C558	ECEA1HKR22	0.22 MFD 50WV Electrolytic	1	
C559	ECEA1HSR47	0.47 MFD 50WV Electrolytic	1	
C560	YECQP2A681J	680 PF 100WV ±5% Polyester	1	
C561	YECUV1H333KX	0.033 MFD 50WV ±10% Chip	1	
C562	YECUV1H472KX	0.0047 MFD 50WV ±10% Chip	1	
C563	ECEA1HK010	1 MFD 50WV Electrolytic	1	
C750	YECUV1H181JM	180 MFD 50WV ±5% Chip	1	
C751	YECQP2A391JV	390 PF 100WV ±5% Polyester	1	
C752	ECEA1ES4R7	4.7 MFD 25WV Electrolytic	1	
C753	ECEA1HS010	1 MFD 50WV Electrolytic	1	
C754	ECEA1HS2R2	2.2 MFD 50WV Electrolytic	1	
C755	ECEA1CS101	100 MFD 16WV Electrolytic	1	
C756	ECEA1AS101	100 MFD 10WV Electrolytic	1	
C757	ECEA1HS010	1 MFD 50WV Electrolytic	1	
C758	YECUV1H222KX	0.0022 MFD 50WV ±10% Chip	1	
C759	ECEA1HS010	1 MFD 50WV Electrolytic	1	
C760	ECEA1CS330	33 MFD 16WV Electrolytic	1	
C761	ECEA1AS221	220 MFD 10WV Electrolytic	1	
C762	ECEA1CS100	10 MFD 16WV Electrolytic	1	
C763	ECEA1ES4R7	4.7 MFD 25WV Electrolytic	1	
C764	ECEA1ES4R7	4.7 MFD 25WV Electrolytic	1	
C765	ECEA1HSR47	0.47 MFD 50WV Electrolytic	1	
C766	ECEA1HSR47	0.47 MFD 50WV Electrolytic	1	
C769	ECSF35ER22X1	0.22 MFD 35WV Tantalum	1	
C770	ECEA1ES4R7	4.7 MFD 25WV Electrolytic	1	
C771	ECEA1CS100	10 MFD 16WV Electrolytic	1	
C772	ECEA1AK470	47 MFD 10WV Electrolytic	1	
C773	ECEA1AK470	47 MFD 10WV Electrolytic	1	
C774	ECEA0JK101	100 MFD 6WV Electrolytic	1	
C775	ECEA1AK470	47 MFD 10WV Electrolytic	1	
C776	ECEA1AS101	100 MFD 10WV Electrolytic	1	
C777	ECEA1AK470	47 MFD 10WV Electrolytic	1	
C778	ECEA1ES4R7	4.7 MFD 25WV Electrolytic	1	

RESISTORS

FM RF BLOCK

Ref. No.	Part No.	Part Name & Description	Pcs Set	Remarks
R51	ERD25VJ563	56k OHM 1/4W ±5% Carbon	1	
R52	ERD25VJ104	100k OHM 1/4W ±5% Carbon	1	
R53	ERD25VJ473	47k OHM 1/4W ±5% Carbon	1	
R54	ERD25VJ181	180 OHM 1/4W ±5% Carbon	1	
R55	ERD25VJ181	180 OHM 1/4W ±5% Carbon	1	
R56	ERD25VJ102	1k OHM 1/4W ±5% Carbon	1	
R57	ERD25VJ101	100 OHM 1/4W ±5% Carbon	1	
R58	ERD25VJ104	100k OHM 1/4W ±5% Carbon	1	
R59	ERD25VJ272	2.7k OHM 1/4W ±5% Carbon	1	
R60	ERD25VJ391	390 OHM 1/4W ±5% Carbon	1	
R62	ERD25VJ104	100k OHM 1/4W ±5% Carbon	1	

RADIO BLOCK

Ref. No.	Part No.	Part Name & Description	Pcs Set	Remarks
R101	ERD10TLJ682	6.8k OHM 1/8W ±5% Chip	1	
R103	ERD10TLJ332	3.3k OHM 1/8W ±5% Chip	1	
R104	ERD25VJ823	82k OHM 1/4W ±5% Carbon	1	
R105	ERD10TLJ223	22k OHM 1/8W ±5% Chip	1	
R106	ERD10TLJ332	3.3k OHM 1/8W ±5% Chip	1	
R107	ERD10TLJ121	120 OHM 1/8W ±5% Chip	1	
R157	ERD10TLJ331	330 OHM 1/8W ±5% Chip	1	
R158	ERD10TLJ391	390 OHM 1/8W ±5% Chip	1	
R159	ERD10TLJ222	2.2k OHM 1/8W ±5% Chip	1	
R161	ERD10TLJ104	100k OHM 1/8W ±5% Chip	1	
R164	ERD25TJ153	15k OHM 1/4W ±5% Carbon	1	
R165	ERD10TLJ561	560 OHM 1/8W ±5% Chip	1	
R223	ERD25TJ104	100k OHM 1/4W ±5% Carbon	1	
R252	ERD10TLJ100	10 OHM 1/8W ±5% Chip	1	
R260	ERD10TLJ2R2	2.2 OHM 1/8W ±5% Chip	1	
R261	ERD10TLJ560	56 OHM 1/8W ±5% Chip	1	
R262	ERD10TLJ122	1.2k OHM 1/8W ±5% Chip	1	
R263	ERD25TJ332	3.3k OHM 1/4W ±5% Carbon	1	
R267	ERD25VJ272	2.7k OHM 1/4W ±5% Carbon	1	
R360	ERD10TLJ2R2	2.2 OHM 1/8W ±5% Chip	1	
R361	ERD10TLJ560	56 OHM 1/8W ±5% Chip	1	
R362	ERD10TLJ122	1.2k OHM 1/8W ±5% Chip	1	
R363	ERD25TJ332	3.3k OHM 1/4W ±5% Carbon	1	
R367	ERD25VJ272	2.7k OHM 1/4W ±5% Carbon	1	
R701	ERD25FJ1R0	1 OHM 1/4W ±5% Carbon	1	
R702	ERD10TLJ151	150 OHM 1/8W ±5% Chip	1	
R703	ERD25FJ5R6	5.6 OHM 1/4W ±5% Carbon	1	
R788	ERD10TLJ820	82 OHM 1/8W ±5% Chip	1	
R561	ERD10TLJ104	100k OHM 1/8W ±5% Chip	1	

VF BLOCK

Ref. No.	Part No.	Part Name & Description	Pcs Set	Remarks
R201	ERD10TLJ124	120k OHM 1/8W ±5% Chip	1	
R202	ERD10TLJ472	4.7k OHM 1/8W ±5% Chip	1	
R203	ERD10TLJ330	33 OHM 1/8W ±5% Chip	1	
R205	ERD25TJ103	10k OHM 1/4W ±5% Carbon	1	
R213	ERD10TLJ102	1k OHM 1/8W ±5% Chip	1	
R215	ERD10TLJ221	220 OHM 1/8W ±5% Chip	1	
R222	ERX1ANJ2R2	2.2 OHM 1W ±5% Metal Film	1	
R301	ERD10TLJ124	120k OHM 1/8W ±5% Chip	1	
R302	ERD10TLJ472	4.7k OHM 1/8W ±5% Chip	1	
R303	ERD10TLJ330	33 OHM 1/8W ±5% Chip	1	
R305	ERD10TLJ103	10k OHM 1/8W ±5% Chip	1	

Ref. No.	Part No.	Part Name & Description				Pcs Set	Remarks
R501	ERD10TLJ222	2.2k OHM	1/8W	±5%	Chip	1	
R502	ERD10TLJ222	2.2k OHM	1/8W	±5%	Chip	1	
R503	ERD10TLJ272	2.7k OHM	1/8W	±5%	Chip	1	
R504	ERD10TLJ223	22k OHM	1/8W	±5%	Chip	1	
R505	ERD10TLJ474	470k OHM	1/8W	±5%	Chip	1	
R506	ERD10TLJ104	100k OHM	1/8W	±5%	Chip	1	
R507	ERD10TLJ102	1k OHM	1/8W	±5%	Chip	1	
R508	ERD10TLJ103	10k OHM	1/8W	±5%	Chip	1	
R511	ERD10TLJ182	1.8k OHM	1/8W	±5%	Chip	1	
R512	ERD10TLJ103	10k OHM	1/8W	±5%	Chip	1	
R513	ERD10TLJ104	100k OHM	1/8W	±5%	Chip	1	
R518	ERD10TLJ563	56k OHM	1/8W	±5%	Chip	1	
R552	ERD10TLJ222	2.2k OHM	1/8W	±5%	Chip	1	
R553	ERD10TLJ123	12k OHM	1/8W	±5%	Chip	1	
R554	ERD10TLJ102	1k OHM	1/8W	±5%	Chip	1	
R555	ERD10TLJ272	2.7k OHM	1/8W	±5%	Chip	1	
R556	ERD10TLJ223	22k OHM	1/8W	±5%	Chip	1	
R557	ERD10TLJ332	3.3k OHM	1/8W	±5%	Chip	1	
R558	ERD10TLJ332	3.3k OHM	1/8W	±5%	Chip	1	
R559	ERD10TLJ104	100k OHM	1/8W	±5%	Chip	1	
R560	ERD10TLJ104	100k OHM	1/8W	±5%	Chip	1	
R563	ERD10TLJ103	10k OHM	1/8W	±5%	Chip	1	
R564	ERD10TLJ392	3.9k OHM	1/8W	±5%	Chip	1	
R565	ERD10TLJ333	33k OHM	1/8W	±5%	Chip	1	
R566	ERD25VJ182	1.8k OHM	1/4W	±5%	Carbon	1	
R567	ERD10TLJ153	15k OHM	1/8W	±5%	Chip	1	
R569	ERD10TLJ103	10k OHM	1/8W	±5%	Chip	1	
R750	ERD10TLJ103	10k OHM	1/8W	±5%	Chip	1	
R751	ERD10TLJ103	10k OHM	1/8W	±5%	Chip	1	
R752	ERD10TLJ102	1k OHM	1/8W	±5%	Chip	1	
R753	ERD10TLJ152	1.5k OHM	1/8W	±5%	Chip	1	
R754	ERD10TLJ332	3.3k OHM	1/8W	±5%	Chip	1	
R755	ERD10TLJ123	12k OHM	1/8W	±5%	Chip	1	
R757	ERD10TLJ471	470 OHM	1/8W	±5%	Chip	1	

Ref. No.	Part No.	Part Name & Description				Pcs Set	Remarks
R758	ERD10TLJ272	2.7k OHM	1/8W	±5%	Chip	1	
R759	ERD10TLJ392	3.9k OHM	1/8W	±5%	Chip	1	
R760	ERD10TLJ221	220 OHM	1/8W	±5%	Chip	1	
R761	ERD10TLJ221	220 OHM	1/8W	±5%	Chip	1	
R762	ERD10TLJ102	1k OHM	1/8W	±5%	Chip	1	
R763	ERD25TJ473	47k OHM	1/4W	±5%	Carbon	1	
R765	ERD25TJ682	6.8k OHM	1/4W	±5%	Carbon	1	
R766	ERD10TLJ103	10k OHM	1/8W	±5%	Chip	1	
R767	ERD10TLJ332	3.3k OHM	1/8W	±5%	Chip	1	
R770	ERD10TLJ561	560 OHM	1/8W	±5%	Chip	1	
R771	ERD10TLJ682	6.8k OHM	1/8W	±5%	Chip	1	
R772	ERD10TLJ123	12k OHM	1/8W	±5%	Chip	1	
R773	ERD10TLJ183	18k OHM	1/8W	±5%	Chip	1	
R774	ERD10TLJ333	33k OHM	1/8W	±5%	Chip	1	
R775	ERD10TLJ564	560k OHM	1/8W	±5%	Chip	1	
R776	ERD10TLJ334	330k OHM	1/8W	±5%	Chip	1	
R777	ERD10TLJ474	470k OHM	1/8W	±5%	Chip	1	
R778	ERD10TLJ473	47k OHM	1/8W	±5%	Chip	1	
R779	ERD10TLJ153	15k OHM	1/8W	±5%	Chip	1	
R780	ERD10TLJ332	3.3k OHM	1/8W	±5%	Chip	1	
R781	ERD10TLJ222	2.2k OHM	1/8W	±5%	Chip	1	
R782	ERD25TJ222	2.2k OHM	1/4W	±5%	Carbon	1	
R783	ERD10TLJ683	68k OHM	1/8W	±5%	Chip	1	
R784	ERD25TJ560	56 OHM	1/4W	±5%	Carbon	1	
R785	ERD10TLJ471	470 OHM	1/8W	±5%	Chip	1	
R786	ERD10TLJ473	47k OHM	1/8W	±5%	Chip	1	
R787	ERD10TLJ151	150 OHM	1/8W	±5%	Chip	1	
R789	ERD10TLJ222	2.2k OHM	1/8W	±5%	Chip	1	
R790	ERD50FJ150	15 OHM	1/8W	±5%	Carbon	1	

Ref. No.	Part No.	Part Name & Description		Pcs Set	Remarks
VARIABLE CAPACITORS					
C55, 63	YECTZ03Z070E	7 PF	Trimmer	2	
C70	ECV1ZW04X53N	4 PF	Trimmer	1	
C102	YECTZ03P600F	60 PF	Trimmer	1	
C107	YECTTC8RT900	90 PF	Trimmer	1	
C137	ECRBA090M13	90 PF	Trimmer	1	
VARIABLE RESISTORS					
VR151	EVNK4AA00B54	50k OHM (B)	Semi-fixed	1	
VR251, 252	EVKJKBS01009	50k OHM	Tone Control	1	
VR351, 352		100k OHM	Volume Control		
w/SW701			w/Power Switch		
VR551	EVNK4AA00B24	20k OHM (B)	Semi-fixed	1	
VR552	EVNK4AA00B14	10k OHM (B)	Semi-fixed	1	
VR750, 751	EVNK4AA00B53	5k OHM (B)	Semi-fixed	2	
VR250	EWJ6QAS95G24	20k OHM (G)	Balance Control	1	
SWITCHES					
SW101	YEAS07065A	AM/FM Selector Switch		1	
SW103, 251	YEAS09108	VF, Loundness Switch		3	
351					
SW102	YEAS07111	Tape/Radio Selector Switch		1	

Ref. No.	Part No.	Part Name & Description	Pcs Set	Remarks
COILS, TRANSFORMERS AND CERAMIC FILTERS				
L52	YELT05N5R6K	FM RF Coil	1	
L54	YELT05N330K	FM RF Coil	1	
L101	YELT05N8R2K	AM RF Coil	1	
L105	ELQS4R7KB	AM RF Choke Coil	1	
L106	YELL07S114	AM OSC Coil	1	
L152	ELQS270KB	FM RF Choke Coil	1	
L501	YELM07S931	FM MPX Coil	1	
L701	YETQ020F054A	Choke Coil	1	
L750	YELM07S932	VF Coil	1	
L751	YELM07S934	VF Coil	1	
IFT51	YEIF07S7049	FM IFT	1	
IFT101	YEIA07S7116	AM IFT	1	
IFT151	YEIF07S7067	FM IFT	1	
CF51	YEIN09N5031	FM Ceramic Filter	1	
CF101	YEIN08N5020	AM Ceramic Filter	1	
CF102	YEIN08N5024	AM Ceramic Filter	1	
CF152, 153	YEIN09N5031	FM Ceramic Filter	2	
COMPONENT COMBINATIONS				
Z501	EXF3SM04	180 PF x 3	1	
Z502	EXBS84472K	4.7k OHM x 4	1	
TUNER				
M50	YEAU05413	Tuner Ass'y	1	
M50-1	YEFE10386A	Pushbutton	5	

MODEL CQ-582EG

Ref. No.	Part No.	Part Name & Description	Pcs Set	Remarks
		ACCESSORIES		
A101	YAFG04008	Supporting Strap	1	
A102	YEFC05267	Trim Plate	1	
A103	YEFC05190A	Trim Plate	1	
A104	YEFE07137	Knob, Tuning & Volume Control	2	
A105	YEFE08142	Knob, Tone & Balance Control	2	
A106	YEP9BS680	Mounting Screw Kit	1	
A106-1	YEJW02008AW	Washer, Flat	4	
A106-2	YEJN01042	Nut, Hexagon	4	
A106-3	XNG5AFXS	Nut, Hexagon	2	
A106-4	XWG5FX	Washer, Flat	2	
A106-5	XWA5BFX	Washer, Spring	2	
A106-6	XVG5C25FXS	Bolt, Hexagon	1	
A106-7	XWC5CFX	Washer, Toothed	1	
		PRINTING		
A110	YEFM28264	Instruction Book	1	

INSTALLATION INSTRUCTIONS/EINBAU

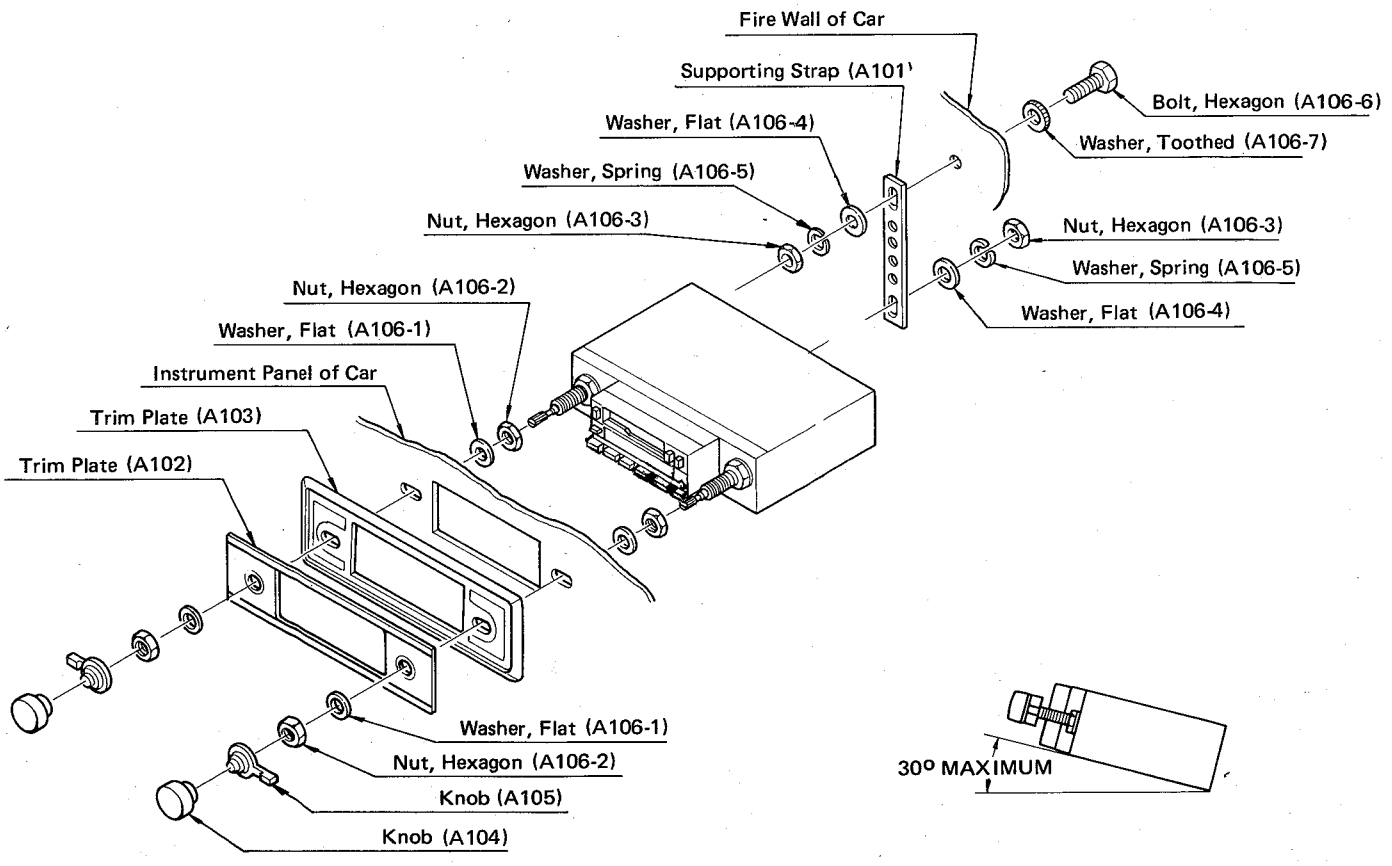

INITIAL FAILURE PARTS LIST/ANFANGS-FEHLER-ERSTATZTEILLISTE

NOTE: The packing kit is supplied for a year after discontinued production.

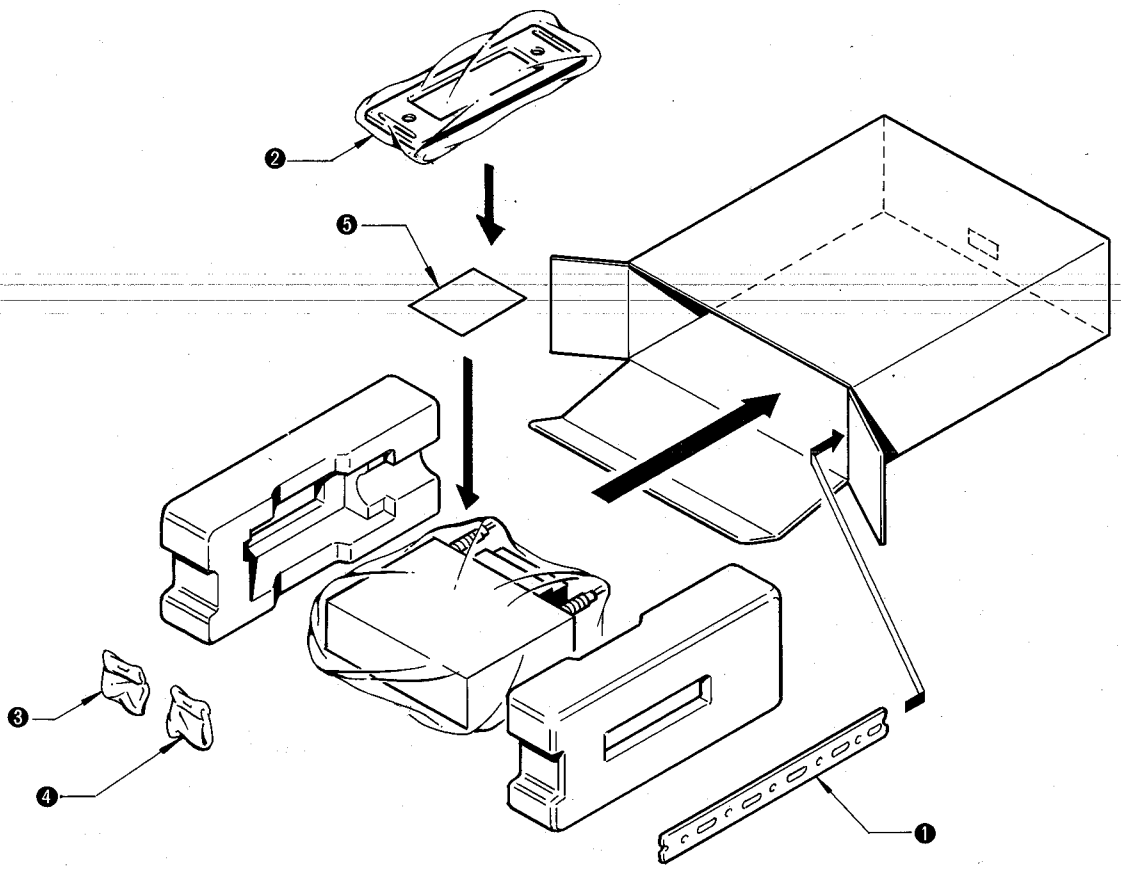

Item No.	Part No.	Part Name & Description	Q'ty
❶	YAFG04008	Supporting Strap	1
❷	YEFC05267	Trim Plate	1
	YEFC05190A	Trim Plate	1
❸	YEFE07137	Knob, Tuning & Volume Control	2
	YEFE08142	Knob, Tone & Balance Control	2
❹	YEJW02008AW	Washer, Flat	4
	YEJN01042	Nut, Hexagon	4
	XNG5AFXS	Nut, Hexagon	2
	XWG5FX	Washer, Flat	2
	XWA5BFX	Washer, Spring	2
	XVG5C25FXS	Bolt, Hexagon	1
	XWC5CFX	Washer, Toothed	1
❺	YEFM28264	Instruction Book	1

E-189
Printed in Ja
1982. 1.